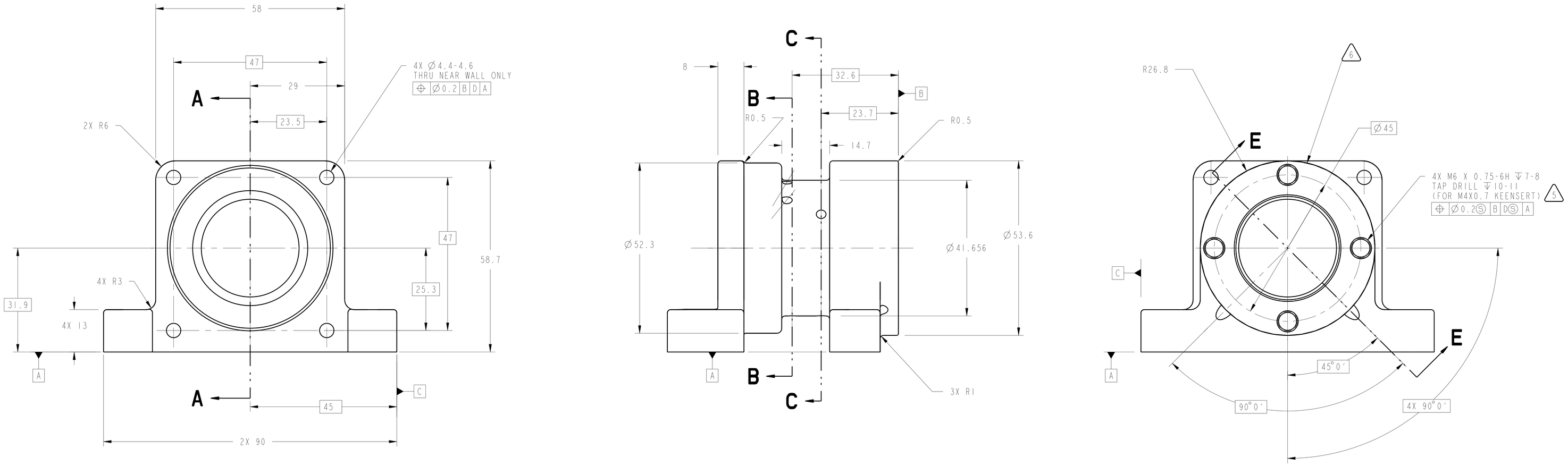

1. MATERIAL:
   ALUMINUM ALLOY 6061-T651 PER
   QQ-A-250/11.
2. 1.6 Ra ALL OVER UNLESS OTHERWISE NOTED PER ANSI/ASME B46.1.
3. ALL EXTERNAL CORNER RADII TO BE R1 UNLESS OTHERWISE SPECIFIED.
4. CLEAR ANODIZE PER MIL-A-8625, TYPE I, CLASS 1, PRIOR TO INSTALLATION OF KEENSERTS PER NOTE 5.
5. INSTALL KEENSERT NUMBER KNCML 4X0.7 PER MANUFACTURER'S SPECIFICATIONS, 4 PLACES, AFTER ANODIZING PER NOTE 4.
6. ELECTROCHEMICAL ETCH DRAWING PART NUMBER 67212MEDM253 ON SPECIFIED SURFACE, PER SAE AS478, METHOD 7A (ZONE H4).
7. ESTIMATED WEIGHT: 0.21 Kg.
8. QUANTITY: ONE REQUIRED.

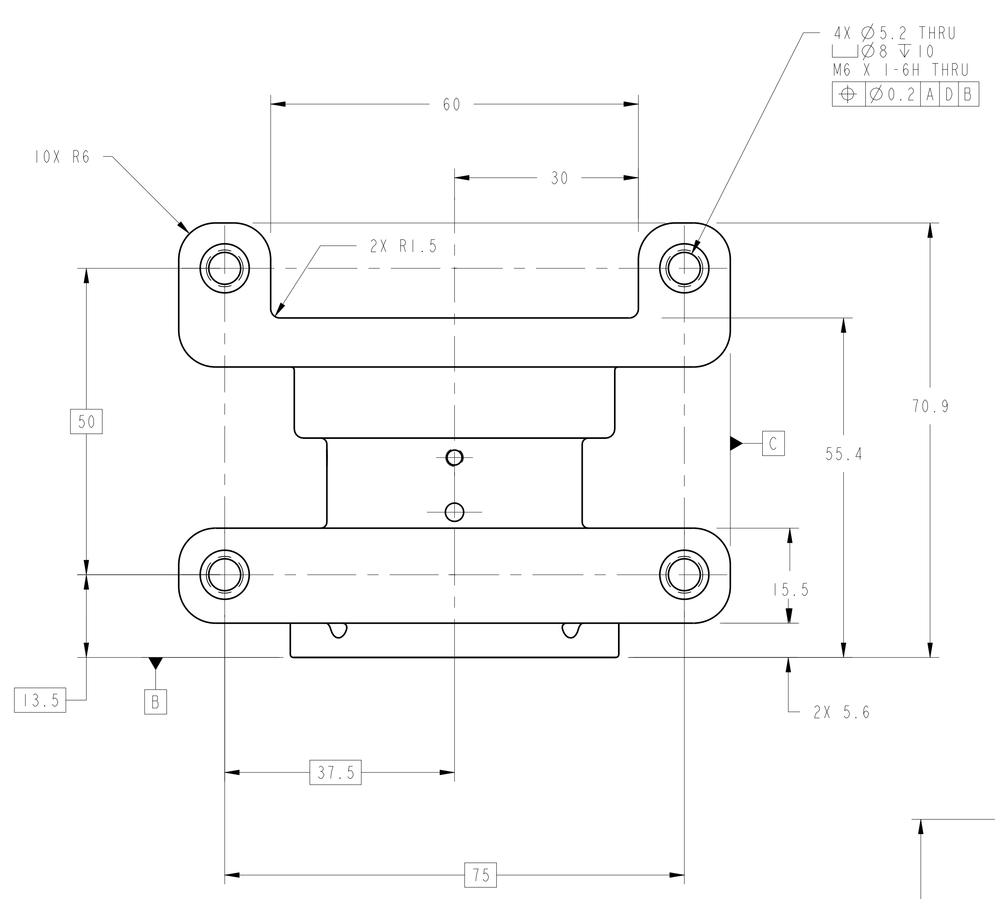

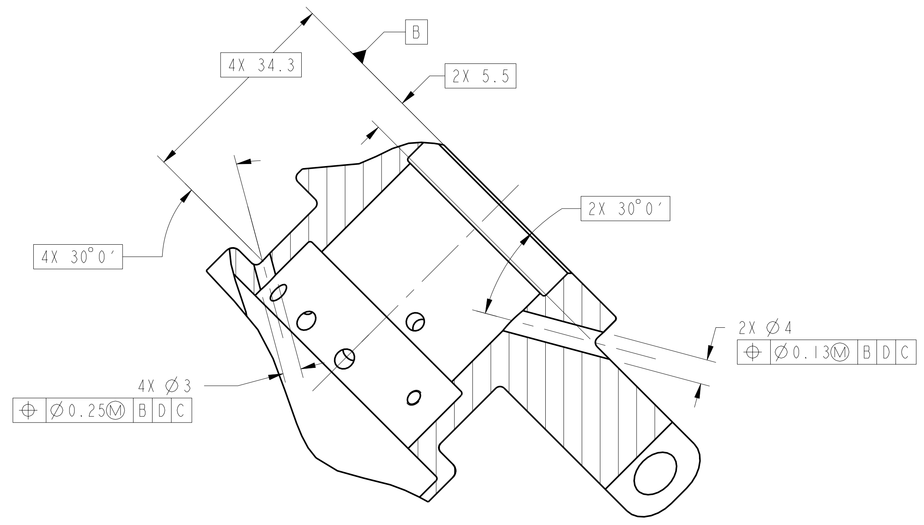

SECTION **E-E**

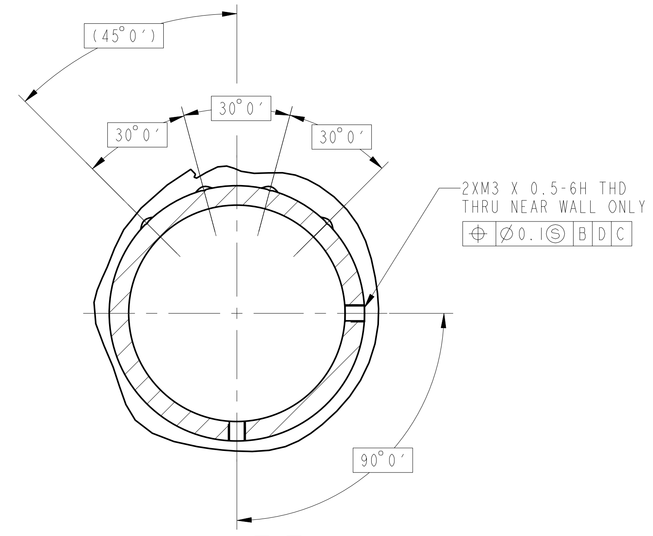

SECTION **B-B**

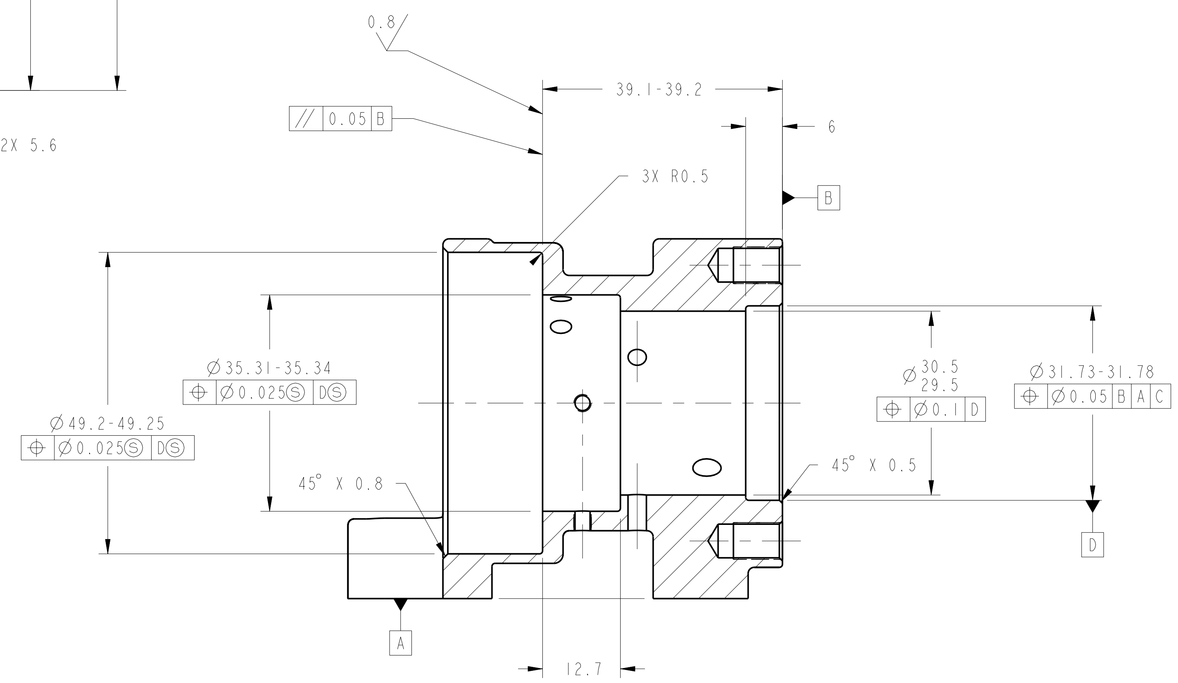

SECTION **A-A**

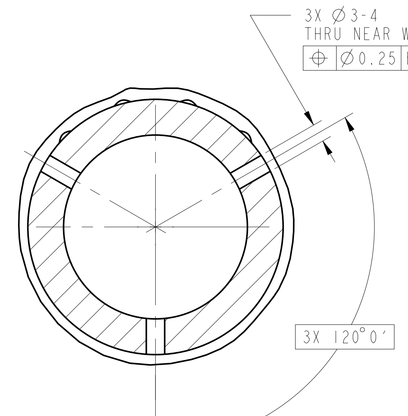

SECTION **C-C**

CHG	ZONE	DESCRIPTION	APP/DATE
B	F/D	ADDED 4X Ø3 HOLES & LOC DIMS, SECTIONS E-E & B-B	D.ROBINSON 02/08/2000
A	F/D C5	ADDED SECTION E-E DIM 29.5-30.5 WAS 29-30	D.ROBINSON 12/17/99

REVISIONS

UNLESS OTHERWISE SPECIFIED:
1. ALL DIMENSIONING AND TOLERANCING PER ASME Y14.5M-1994
2. ALL DIMENSIONS ARE IN MILLIMETERS
3. BREAK EDGES: 0.2-0.5
4. LINEAR TOLERANCES:
   0.5-6 ±0.1
   OVER 6-30 ±0.2
   OVER 30-120 ±0.3
   OVER 120-315 ±0.5
   OVER 315-1000 ±0.8
   OVER 1000-2000 ±1.2
5. ANGULAR TOLERANCES: 0° 30′

CONTRACT	NAS3-27600
CONTRACTOR	ADF, INC.
TASK ORDER	60
DRAFTER	ADF/D.ROBINSON
ENGINEER	ANLX/I.DRALYUK
DESIGNER	ANLX/I.DRALYUK

THIRD ANGLE PROJECTION

NATIONAL AERONAUTICS AND SPACE ADMINISTRATION
JOHN H. GLENN RESEARCH CENTER
LEWIS FIELD
CLEVELAND, OHIO

EXHAUST VENT PUMP ASSEMBLY

67212MELM250

253 PUMP MOTOR HOUSING

PDM REL LEVEL: **RELEASE** PDM REVISION: **x.6**

PDM DATABASE: **FCF**

MODEL NAME: **67212MEDM253**

PRIOR TO USE VERIFY THE INTENDED PURPOSE IN PDM ("FOR" ATTRIBUTE)

SIZE	DRAWING NUMBER	REV	BLDG	AREA
A0	67212MEDM253	B	333	-
			UNITS: mm	
SCALE: 2:1	INITIAL REL DATE 12/22/98	SHEET 1 OF 1	DISCIPLINE MECHANICAL	

PRO/E VERSION: 19.0

SIZE A0 DRAWING NUMBER 67212MEDM253 REV B

NAME:CDEAN OBJECT:67212MEDM253 DATE:30-Oct-00 11:24:49