1. MATERIAL:
   TYPE 316 STAINLESS STEEL PER FEDERAL SPEC QQ-S-763, CONDITION A.
2. 1.6 Ra ALL OVER UNLESS OTHERWISE NOTED PER ANSI/ASME B46.1.
3. CLEAN AND PASSIVATE PER MIL-S-5002, PARAGRAPHS 3.4.2.4 AND 3.4.2.4.1 AND FEDERAL SPECIFICATION QQ-P-35.
4. ELECTROCHEMICAL ETCH DRAWING PART NUMBER 67212MEDM252 ON SPECIFIED SURFACE, PER SAE AS478, METHOD 7A (ZONE A8).
5. ESTIMATED WEIGHT: 0.21 Kg.
6. QUANTITY: ONE REQUIRED.

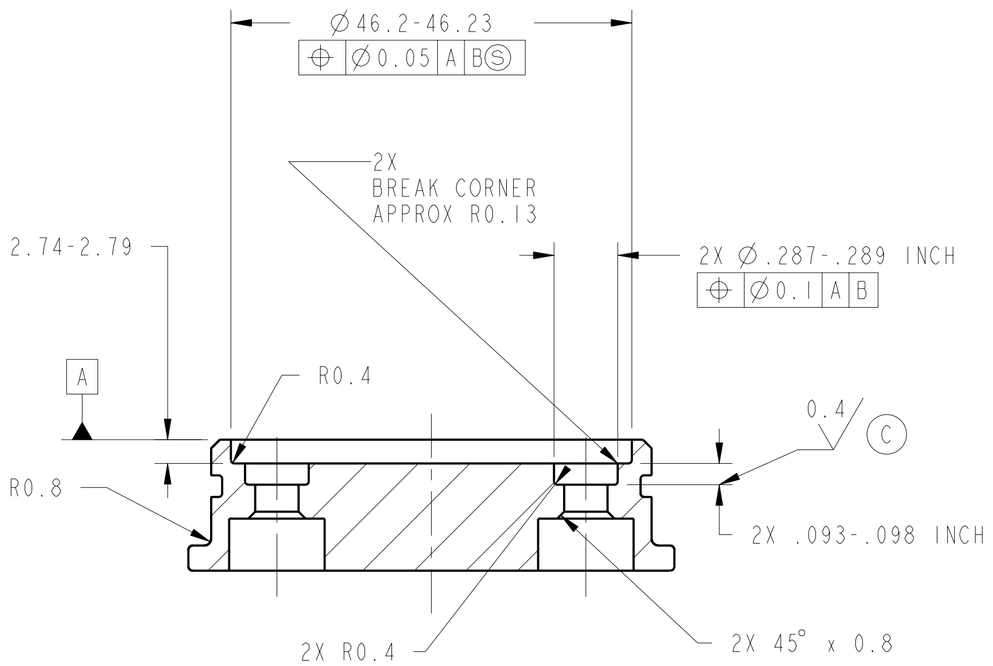

SECTION **A-A**

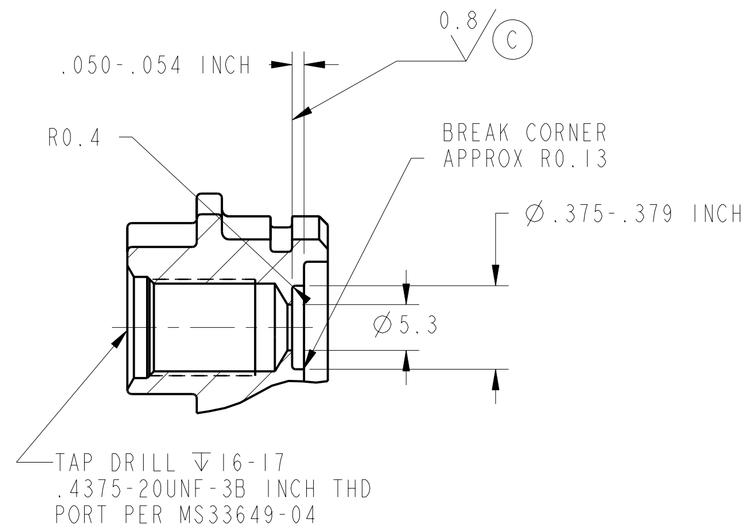

SECTION **B-B**
2 PLACES
⌖ Ø0.13 A B

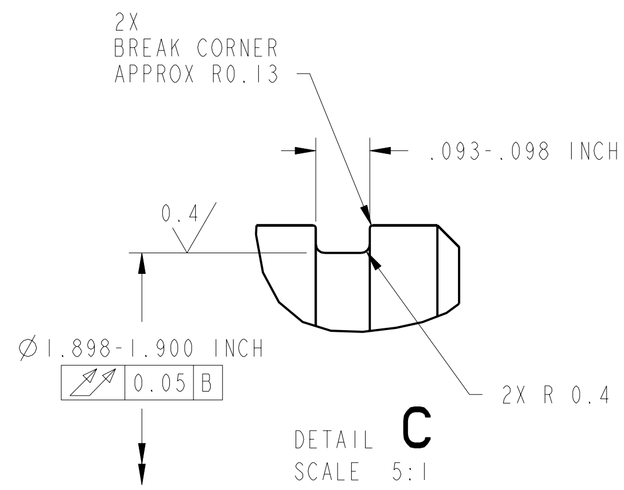

DETAIL **C**
SCALE 5:1

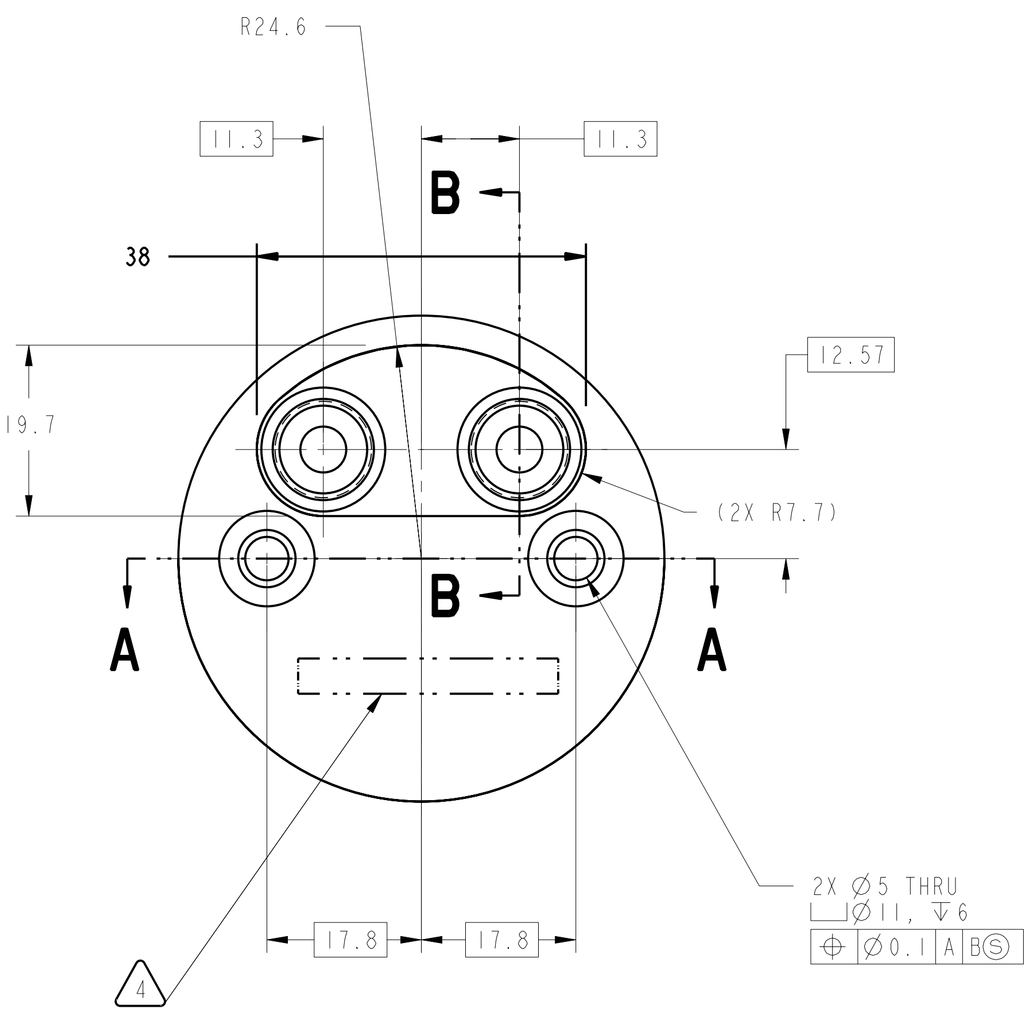

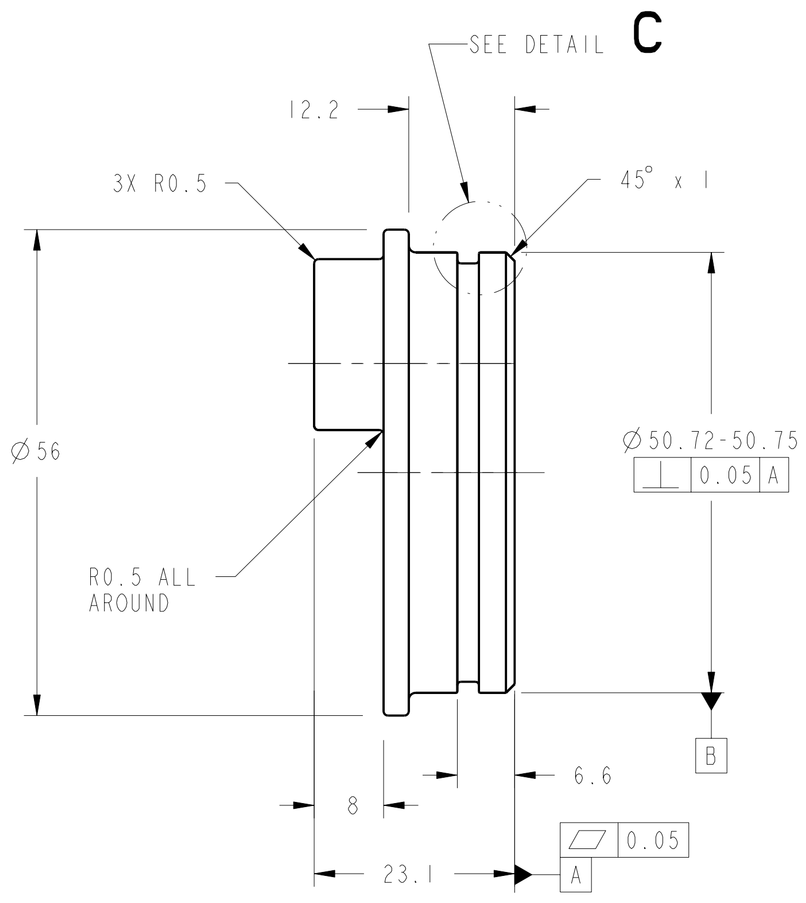

UNLESS OTHERWISE SPECIFIED:
1. ALL DIMENSIONING AND TOLLERANCING PER ASME Y14.5M-1994
2. ALL DIMENSIONS ARE IN MILLIMETERS
3. BREAK EDGES: 0.2-0.5
4. LINEAR TOLERANCES:
   0.5-6 ±0.1
   OVER 6-30 ±0.2
   OVER 30- 120 ±0.3
   OVER 120-315 ±0.5
   OVER 315-1000 ±0.8
   OVER 1000-2000 ±1.2
5. ANGULAR TOLERANCES: 0° 30'

METRIC
THIRD ANGLE PROJECTION

DRAFTER	ADF/D.ROBINSON
DESIGNER	ANLX/I.DRALYUK
ENGINEER	ANLX/I.DRALYUK
MODEL NAME: 67212MEDM252	
PRO/E VERSION: 19.0	
RELEASE DATE: 12/22/98	

CHG	ZONE	DESCRIPTION	APP/DATE

REVISIONS

NATIONAL AERONAUTICS AND SPACE ADMINISTRATION
LEWIS RESEARCH CENTER
CLEVELAND, OHIO

252 PUMP FLANGE-FRONT

EXHAUST VENT PUMP ASSEMBLY
67212MELM250

SIZE	DRAWING NUMBER	REV	STAT	BLDG/CELL
A1	67212MEDM252	-	R	333/-

SCALE: 2:1 SHEET 1 OF 1

DRAWING NUMBER 67212MEDM252
REV -
STAT R

NAME:EDJEN OBJECT:67212MEDM252 DATE:30-Oct-00 11:23:54