1. MATERIAL:
   TYPE 316 STAINLESS STEEL PER FEDERAL SPEC QQ-S-763, CONDITION A.
2. 1.6 Ra ALL OVER UNLESS OTHERWISE NOTED PER ANSI/ASME B46.1.
3. ALL EXTERNAL CORNER RADII TO BE R1.5 UNLESS OTHERWISE SPECIFIED.
4. ALL INTERNAL FILLET RADII TO BE R0.4 UNLESS OTHERWISE SPECIFIED.
5. BREAK SHARP EDGES APPROXIMATELY R0.2.
6. CLEAN AND PASSIVATE PER MIL-S-5002, PARAGRAPHS 3.4.2.4 AND 3.4.2.4.1 AND FEDERAL SPECIFICATION QQ-P-35.
7. ELECTROCHEMICAL ETCH DRAWING PART NUMBER 67212MEDM251 ON SPECIFIED SURFACE PER SAE AS478, METHOD 7A (ZONE B4).
8. ELECTROCHEMICAL ETCH TEXT SHOWN IN 6-8mm HIGH CHARACTERS ON SPECIFIED SURFACE, PER SAE AS478, METHOD 7A (ZONE F10).
9. ESTIMATED WEIGHT: 0.49 Kg.
10. QUANTITY: ONE REQUIRED.

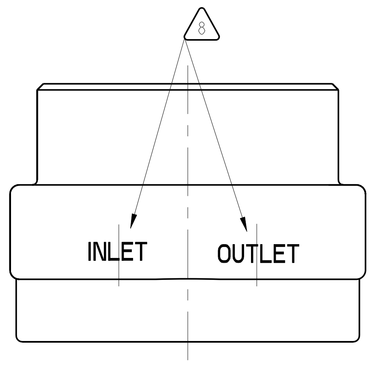

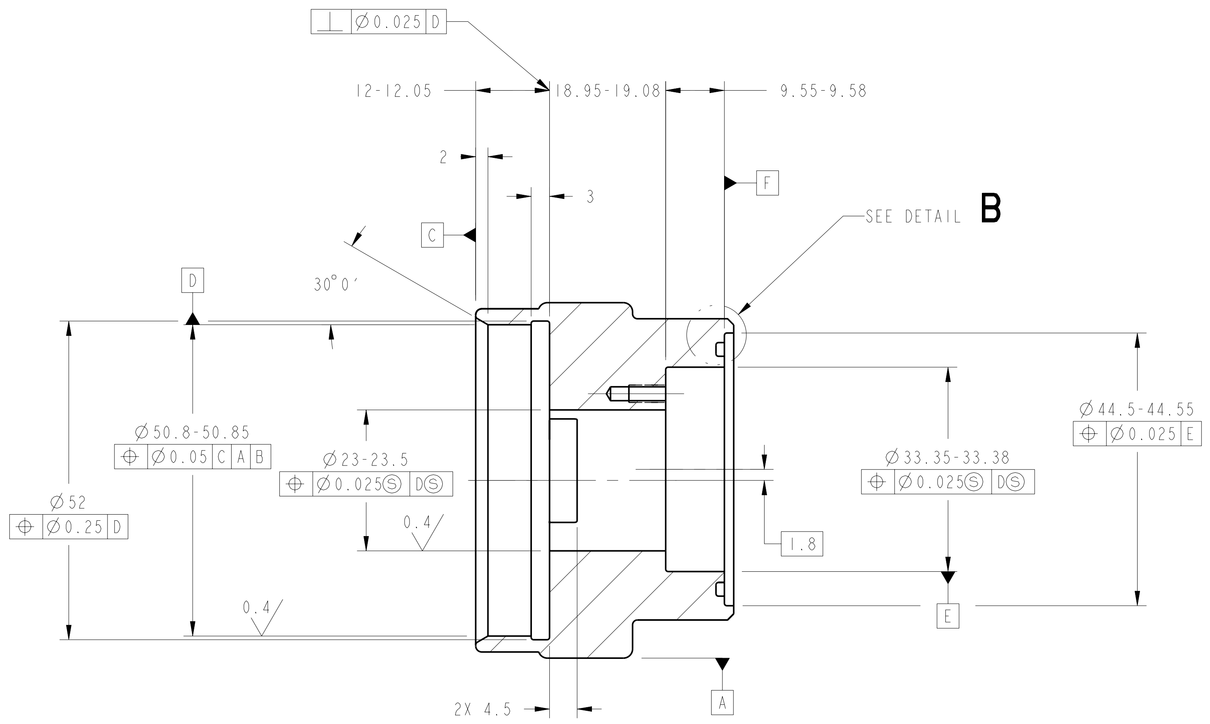

SECTION A-A

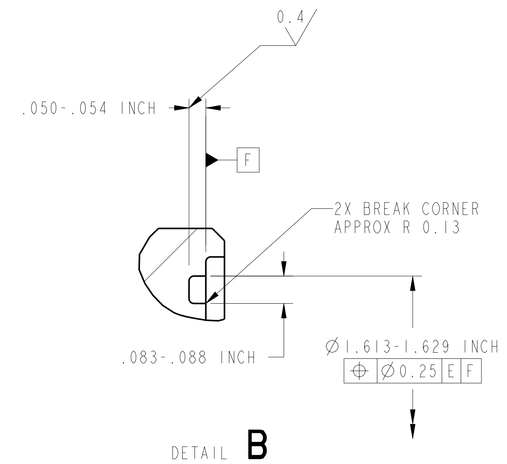

DETAIL B
SCALE 4:1

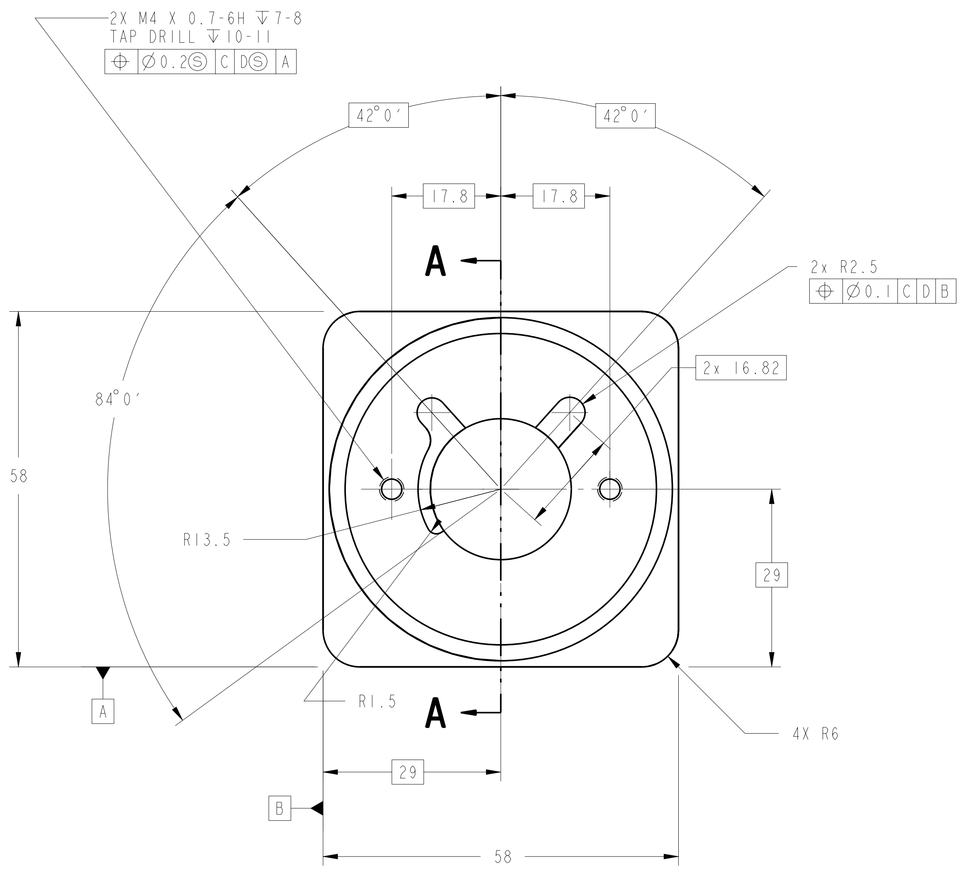

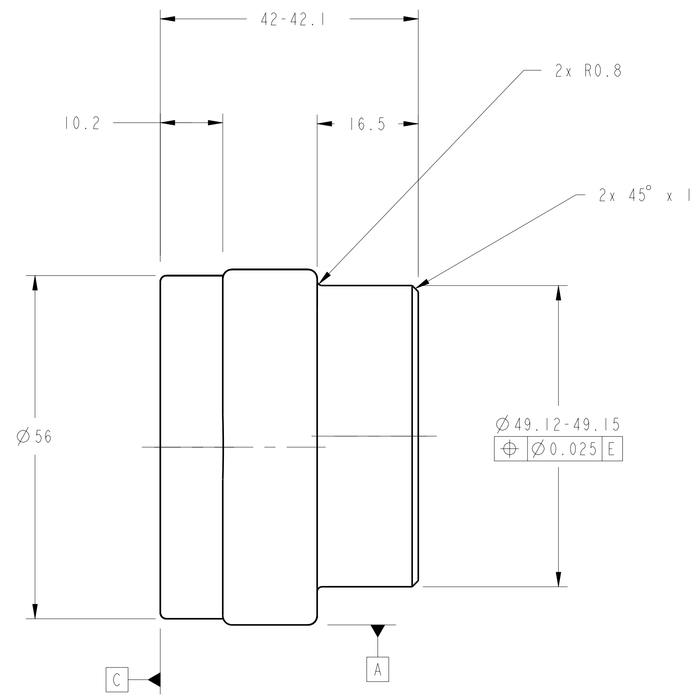

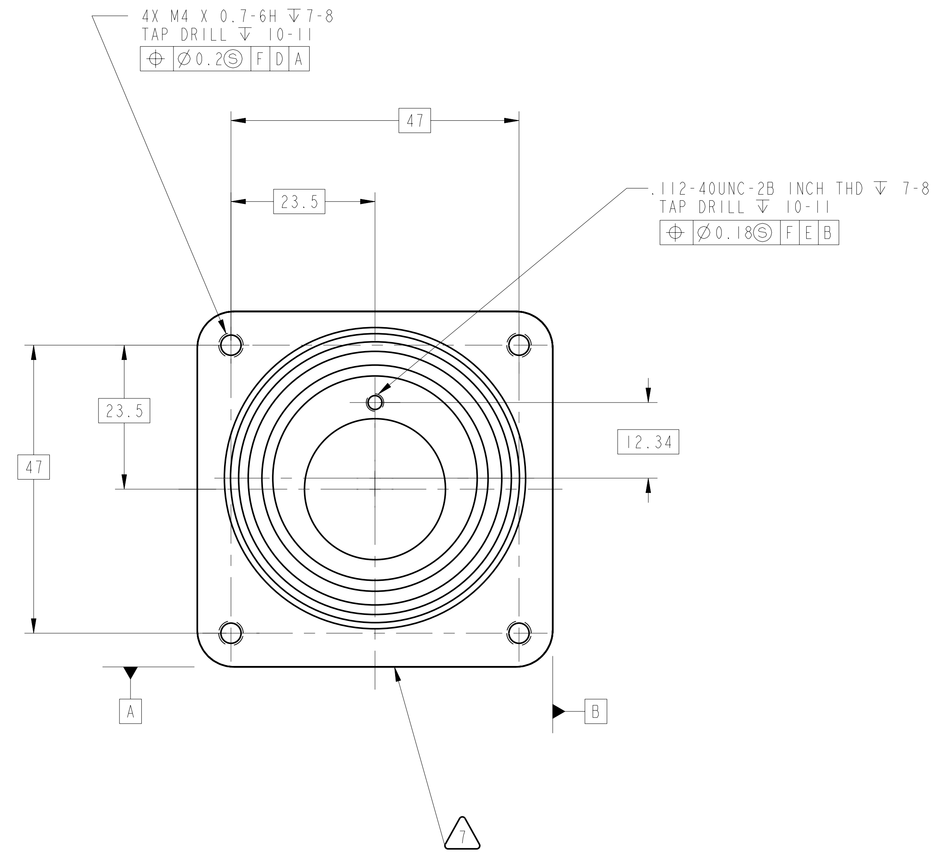

UNLESS OTHERWISE SPECIFIED:
1. ALL DIMENSIONING AND TOLLERANCING PER ASME Y14.5M-1994
2. ALL DIMENSIONS ARE IN MILLIMETERS
3. BREAK EDGES: 0.2-0.5
4. LINEAR TOLERANCES:
   0.5-6 ±0.1
   OVER 6-30 ±0.2
   OVER 30- 120 ±0.3
   OVER 120-315 ±0.5
   OVER 315-1000 ±0.8
   OVER 1000-2000 ±1.2
5. ANGULAR TOLERANCES: 0° 30′

METRIC

THIRD ANGLE PROJECTION

DRAFTER	ADF/D.ROBINSON
DESIGNER	ANLX/I.DRALYUK
ENGINEER	ANLX/I.DRALYUK
MODEL NAME:	67212MEDM251
PRO/E VERSION:	19.0
RELEASE DATE:	12/22/98

CHG	ZONE	DESCRIPTION	APP/DATE

REVISIONS

NATIONAL AERONAUTICS AND SPACE ADMINISTRATION
LEWIS RESEARCH CENTER
CLEVELAND, OHIO

251 PUMP HOUSING

EXHAUST VENT PUMP ASSEMBLY
67212MELM250

SIZE	DRAWING NUMBER	REV	STAT	BLDG/CELL
A0	67212MEDM251	-	R	333/-

SCALE: 2:1 SHEET 1 OF 1

DRAWING NUMBER 67212MEDM251 REV - STAT R

NAME:IBAEN OBJECT:67212MEDM251 DATE:30-Oct-00 11:22:06