1. MODIFY EXISTING BASE OF TYLAN GENERAL MASS FLOW CONTROLER FC-2921V6V-J100SLMN2 AS SHOWN. PROTECT ALL EXISTING SEALING SURFACES AND FEATURES FROM ANY DAMAGE. (MATERIAL: 300 SERIES STAINLESS STEEL)

2. 0.8 Ra ALL MACHINED SURFACES UNLESS OTHERWISE NOTED.

3. ELECTROCHEMICAL ETCH DRAWING PART NUMBER 67212MEDM245 ON SPECIFIED SURFACE PER SAE AS478, METHOD 7A (ZONE D5).

4. CLEAN SURFACES WITH 190 PROOF ETHYL ALCOHOL. WIPE WITH CLEAN COTTON SWABS AND/OR LINT-FREE CLOTH.

5. HANDLE WITH CLEAN LINT-FREE GLOVES.

6. BEFORE STORAGE, PROTECT WITH CONTAMINATION BARRIER. USE CLEAN, NEW, TRANSPARENT, POLYETHYLENE BAG SEALED WITH FIBERGLASS PACKAGING TAPE. SEAL AND MARK WITH IDENTIFICATION NUMBER ON TAG ATTACHED TO BAG.

7. PROCESS PLAN REQUIRED.

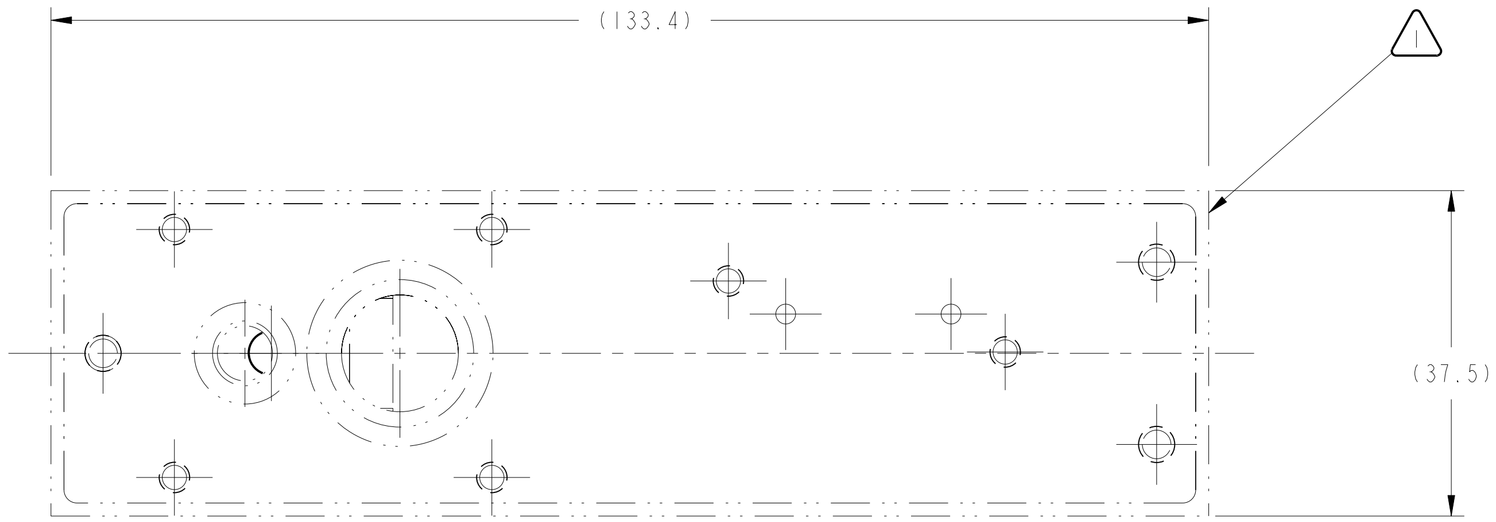

TOP VIEW

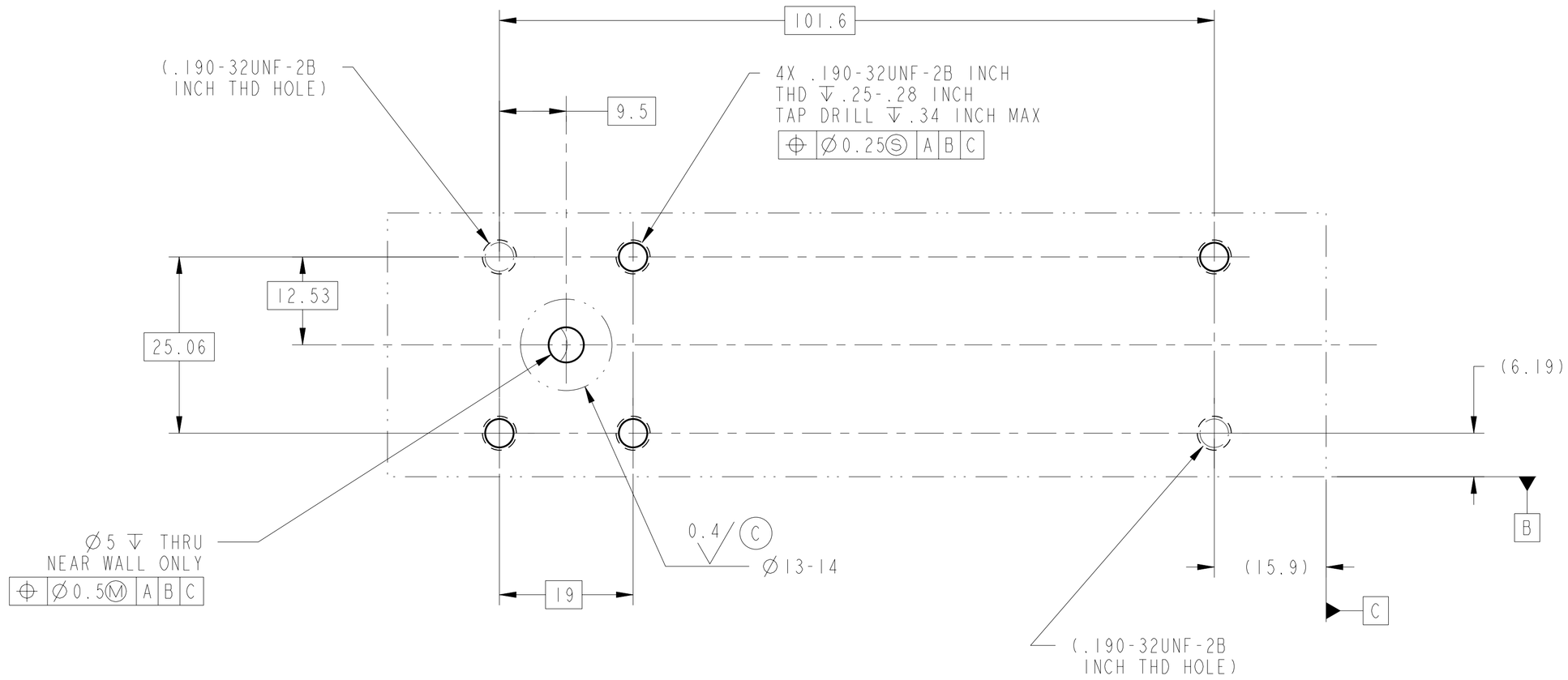

BOTTOM VIEW

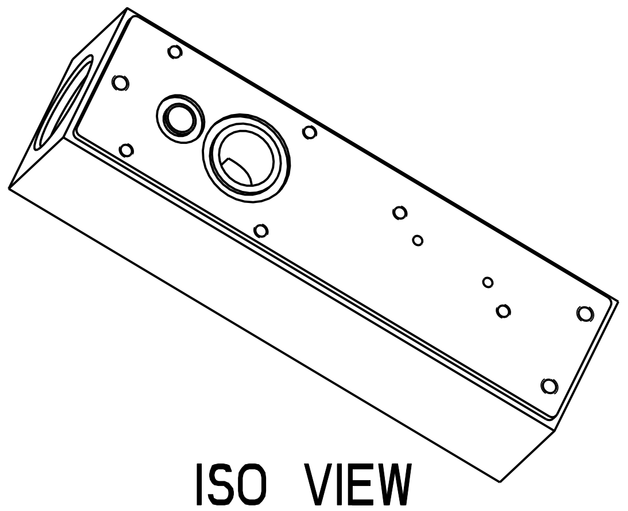

ISO VIEW

SCALE 1:1

CHG	ZONE	DESCRIPTION	APP/DATE

REVISIONS

PRIOR TO USE VERIFY THE INTENDED PURPOSE IN PDM ("FOR" ATTRIBUTE)

UNLESS OTHERWISE SPECIFIED:
1. ALL DIMENSIONING AND TOLERANCING PER ASME Y14.5M-1994
2. ALL DIMENSIONS ARE IN MILLIMETERS
3. BREAK EDGES: 0.2-0.5
4. LINEAR TOLERANCES:
   0.5-6 ±0.1
   OVER 6-30 ±0.2
   OVER 30- 120 ±0.3
   OVER 120-315 ±0.5
   OVER 315-1000 ±0.8
   OVER 1000-2000 ±1.2
5. ANGULAR TOLERANCES: 0° 30′

CONTRACT	NASA3-27600
CONTRACTOR	ADF, INC.
TASK ORDER	60
DRAFTER	ADF/D.ROBINSON
ENGINEER	ANLX/I.DRALYUK
DESIGNER	ADF/D.ROBINSON

THIRD ANGLE PROJECTION

NATIONAL AERONAUTICS AND SPACE ADMINISTRATION
JOHN H. GLENN RESEARCH CENTER
LEWIS FIELD
CLEVELAND, OHIO

EVP MODIFIED TYLAN MFC ASSEMBLY

67212MELM244

245 EVP MODIFIED TYLAN MFC BASE

PDM REL LEVEL: **RELEASE** PDM REVISION: **x.4**

PDM DATABASE: **FCF**

MODEL NAME: **67212MEDM245**

CHECK FOR ANY OUTSTANDING ECO'S PRIOR TO USE

SIZE	DRAWING NUMBER	REV	BLDG	AREA
A1	67212MEDM245	-	333	-

UNITS: mm

SCALE:	INITIAL REL DATE	SHEET	DISCIPLINE
2:1	XX/XX/XX	1 OF 1	MECHANICAL

PRO/E VERSION: 19.0

SIZE A1 DRAWING NUMBER 67212MEDM245 REV -

NAME:EDJEN OBJECT:67212MEDM245 DATE:30-Oct-00 11:20:01