COMMERCIAL PARTS LIST

PART TYPE	BALLOON NO	DESCRIPTION	QTY/ ASSY
C	1	INSERT, SCREW THREAD KEY LOCKED, 303 STAINLESS STEEL LIGHTWEIGHT, METRIC KNML 6 X 1.0 (FOR M6 X 1 FASTENER)	4
C	2	INSERT, SCREW THREAD KEY LOCKED, 303 STAINLESS STEEL MINIATURE, METRIC KNCML 4 X 0.7 (FOR M4 X 0.7 FASTENER)	2

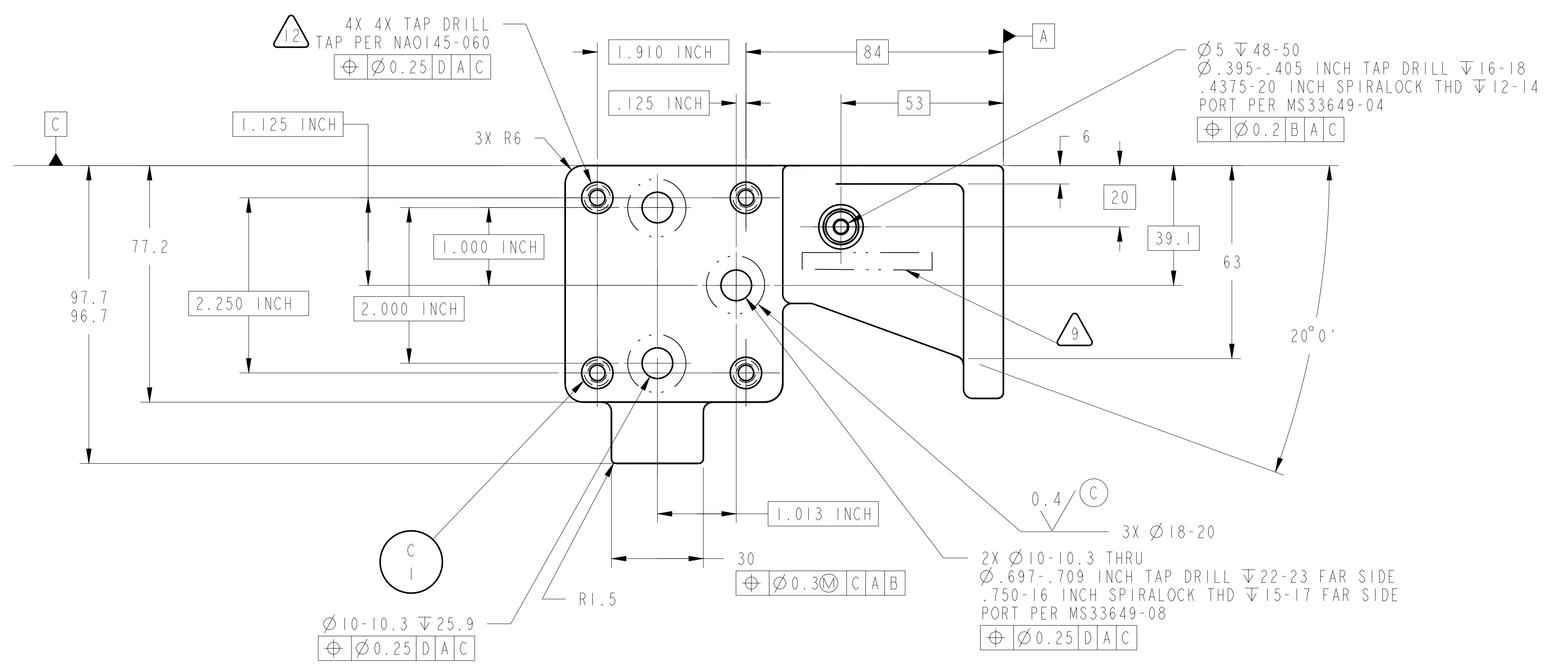

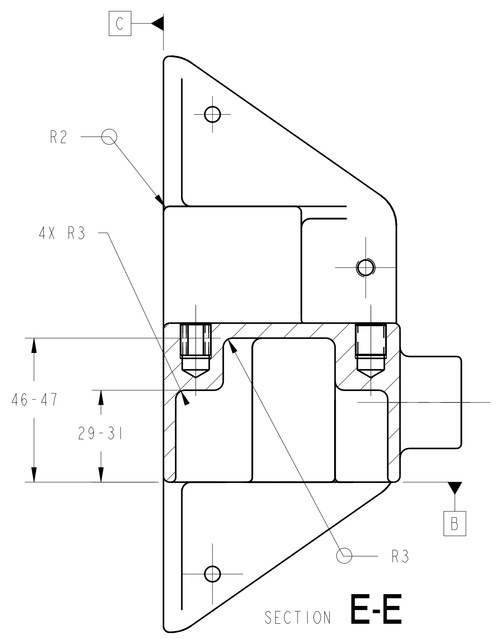

SECTION **E-E**

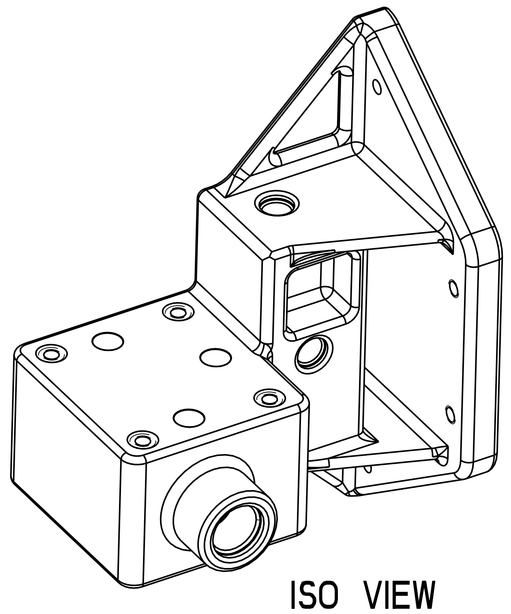

ISO VIEW

TANGENT EDGE LINES SHOWN

1. MATERIAL: 6061-T651 ALUMINUM PER FEDERAL SPEC QQ-A-250/11.
2. CERTIFICATION OF CHEMICAL AND MECHANICAL PROPERTIES REQUIRED.
3. ULTRASONIC INSPECT PER MIL-STD-2154, PRIOR TO FABRICATION. ACCEPTANCE PER SECTION 5.5.4., TABLE VI, CLASS LEVEL A.
4. 3.2 Ra ALL MACHINED SURFACES UNLESS OTHERWISE NOTED.
5. ALL OUTSIDE CORNERS TO BE R3 UNLESS OTHERWISE SPECIFIED.
6. ALL INSIDE FILLETS TO BE R6 UNLESS OTHERWISE SPECIFIED.
7. ALL INTERNAL PORTS MUST BE BLENDED SMOOTH WITH NO FEATHERED EDGES OR BURRS.
8. FINISHED PART MUST PASS DYE PENETRANT INSPECTION PER ASTM E1417. ACCEPTANCE PER MIL-STD-1907.
9. ELECTROCHEMICAL ETCH DRAWING PART NUMBER 67212MEDM241 ON SPECIFIED SURFACE PER SAE AS478, METHOD 7A (ZONE G7).
10. SURFACE TREAT ENTIRE PART PER MIL-C-5541 USE IRIDITE 14.2 OR APPROVED EQUIVALENT PER MIL-C-81706, CLASS 3, FORM II, METHOD B OR C AS APPLICABLE. PRIOR TO INSTALLING KEENSERTS. SPOT TOUCH UP BY METHOD B.
11. FLAT BLACK ANODIZE ENTIRE PART EXCEPT TAPPED HOLES AND INTERNAL PASSAGES, PER MIL-A-8625, TYPE II, CLASS 2, PRIOR TO INSTALLING KEENSERTS. ALL DIMENSIONS APPLY AFTER ANODIZING.
12. INSTALL KEENSERT INSERT PER MANUFACTURER'S SPECIFICATIONS AFTER SURFACE TREATMENT PER NOTES 10 & 11.
13. CLEAN SURFACES WITH 190 PROOF ETHYL ALCOHOL. WIPE WITH CLEAN LINT FREE CLOTH HANDLE WITH CLEAN, LINT-FREE GLOVES.
14. BEFORE STORAGE, PROTECT WITH CONTAMINATION BARRIER. USE CLEAN, NEW, TRANSPARENT, POLYETHYLENE BAG, FIBERGLASS PACKAGING TAPE. SEAL AND MARK WITH IDENTIFICATION NUMBER ON TAG ATTACHED TO BAG.
15. PROCESS PLAN REQUIRED.
16. ESTIMATED WEIGHT: 1.197 Kg.

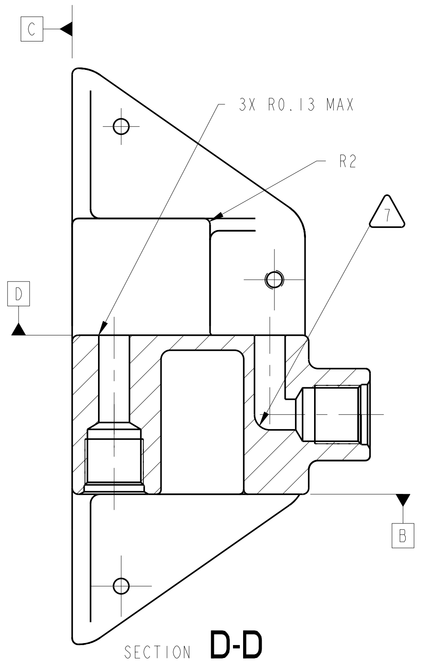

SECTION **D-D**

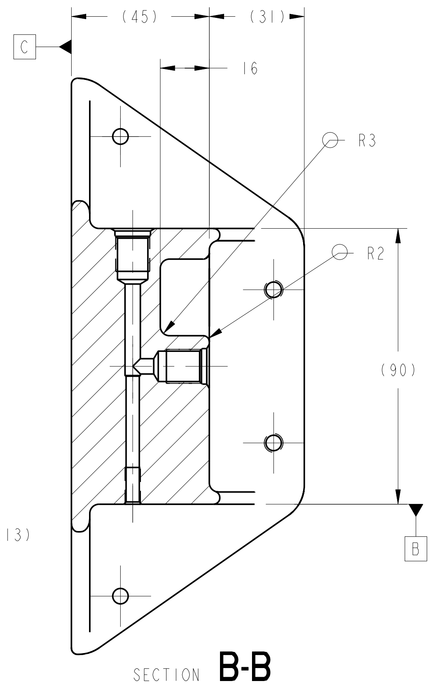

SECTION **B-B**

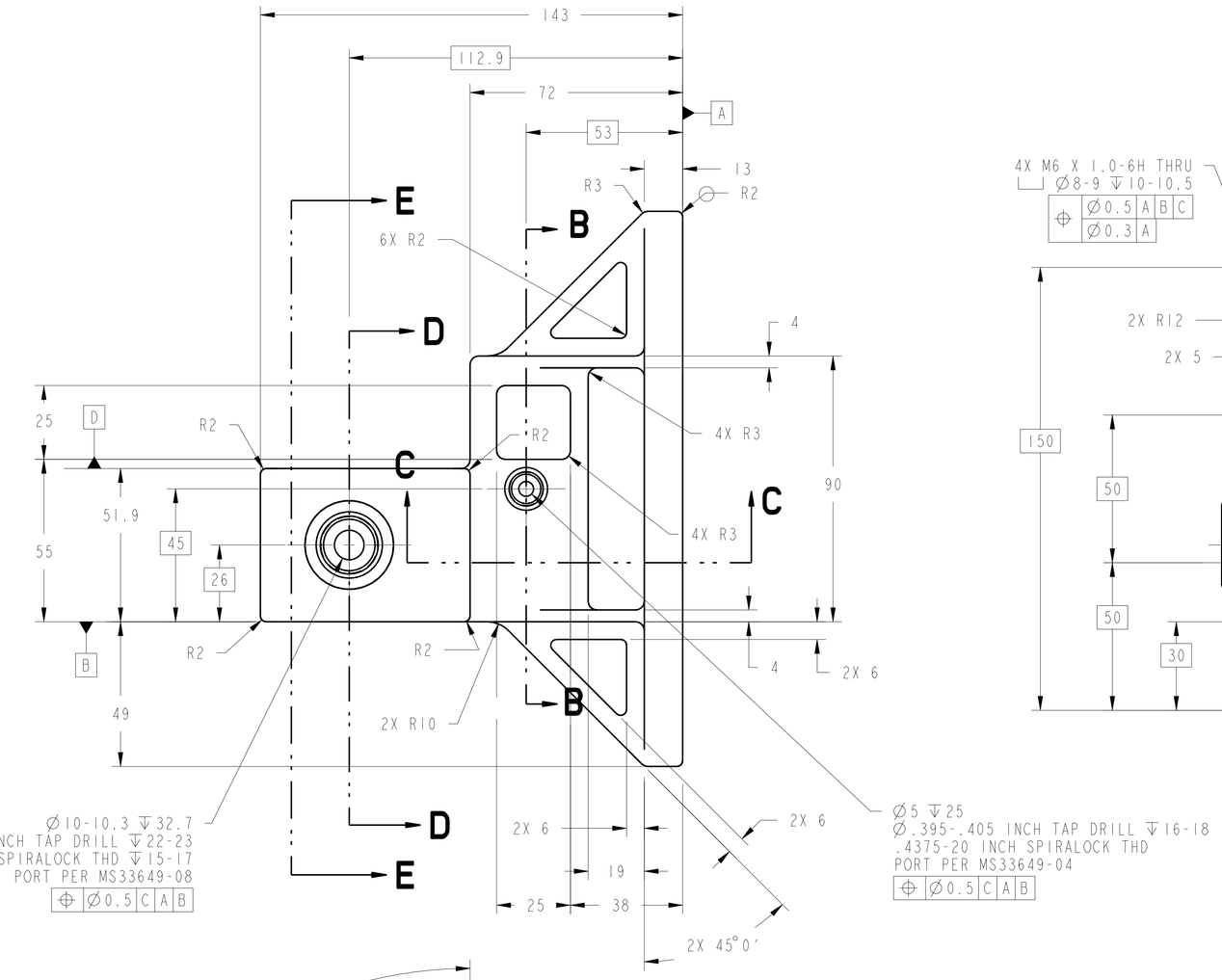

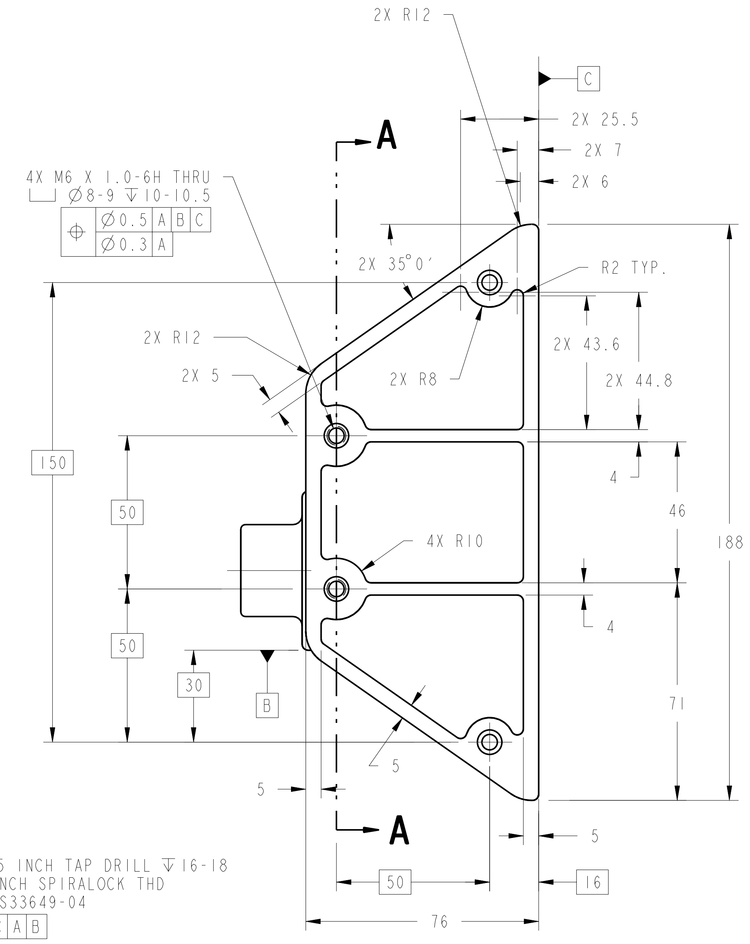

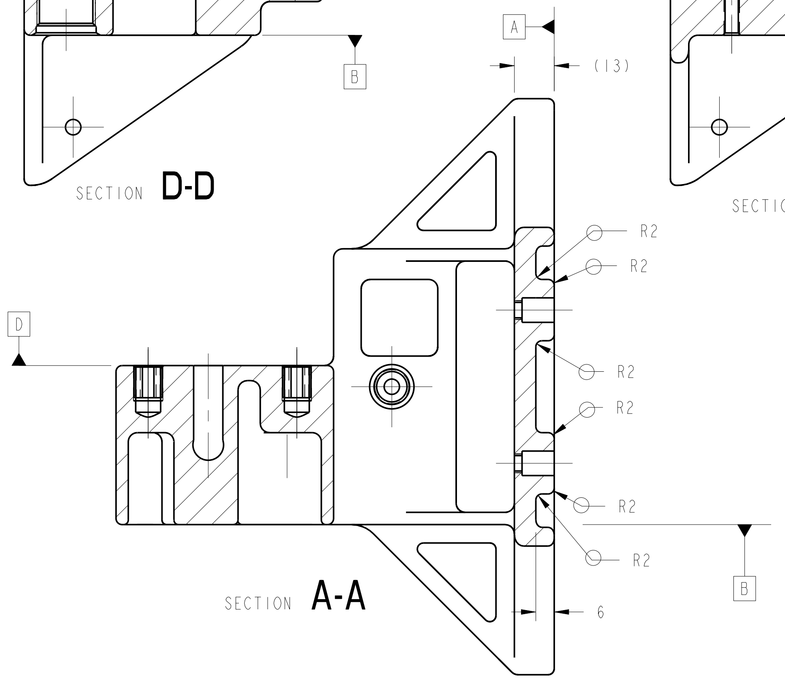

SECTION **A-A**

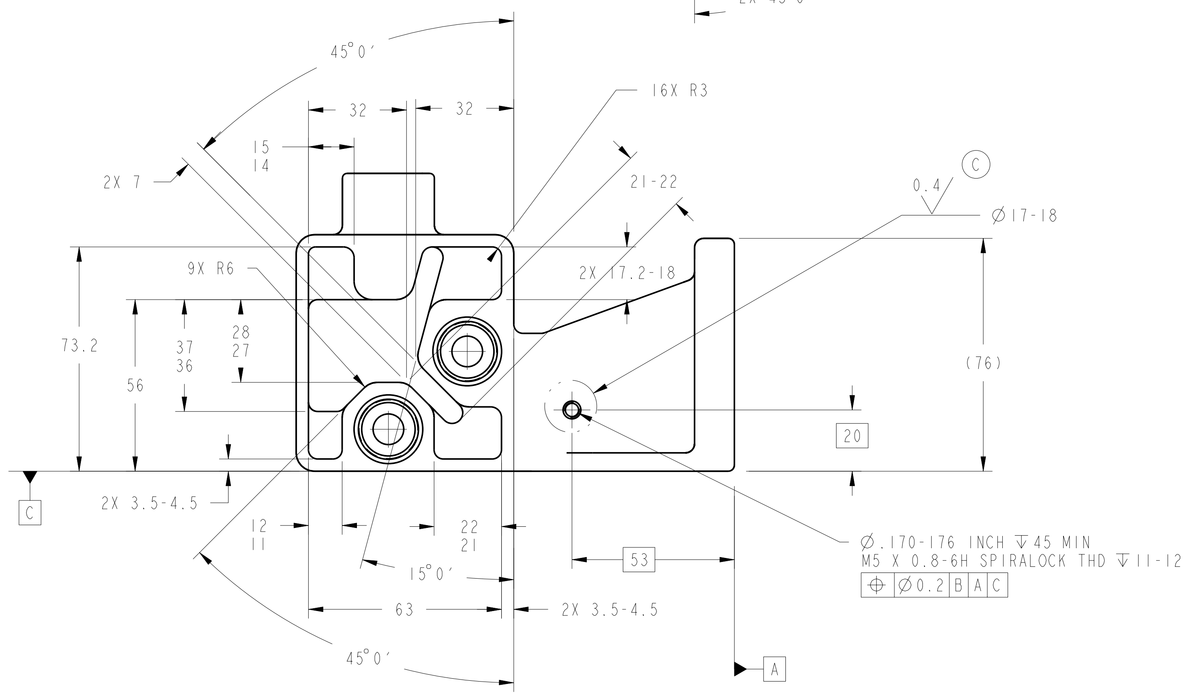

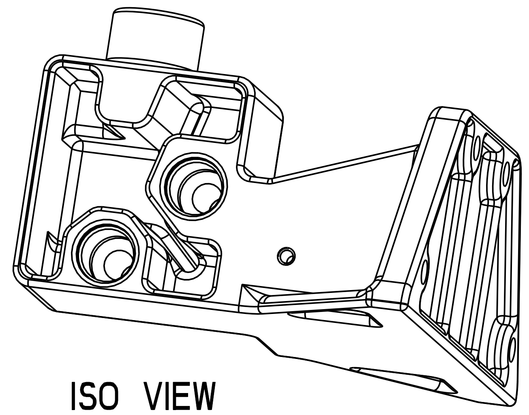

ISO VIEW

TANGENT EDGE LINES SHOWN

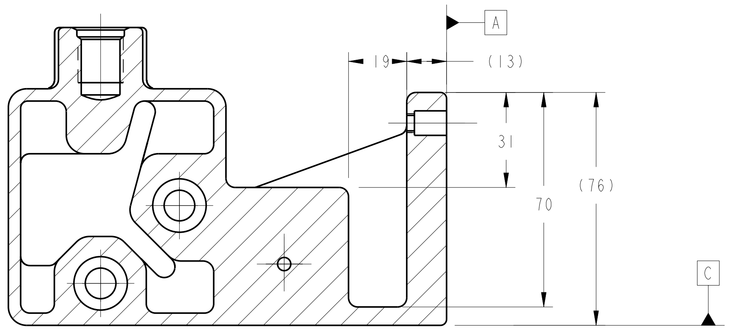

SECTION **C-C**

CHG	ZONE	DESCRIPTION	APP/DATE
A	E3	RT. SIDE VIEW	LT 02/17/00
	D2	DIM. 188mm WAS: 90mm	
	E3	ADDED ANGLE 2X 35°	
	F4	4X M6 ect...WAS: 3X M6	
	D3,E3	ADDED 2-RIB 4mm THK.	
	E6	FRONT VIEW	
	F6	DIM. 143mm WAS: 163mm	
	F6	DIM. 72mm WAS: 92mm	
	C6	DIM. 19mm WAS: 39mm	
	F6	DIM. 53mm WAS: 73mm	
	C6	ADDED ANGLES 2X 45°	
	E6	25mm X 25mm X 16mm DP. POCKET WAS: 2 POCKET 32mm X 32mm X 16mm DP.	
	G6	TOP VIEW	
	G5	ADDED ANGLES 2X 20°	
	A7	BACK SIDE VIEW WAS: REMOVED	
	A7	REMOVED: 2 TAP DRILL HOLES FOR KEENSERT KNCML 4x0	

REVISIONS

UNLESS OTHERWISE SPECIFIED:
1. ALL DIMENSIONING AND TOLERANCING PER ASME Y14.5M-1994
2. ALL DIMENSIONS ARE IN MILLIMETERS
3. BREAK EDGES: 0.2-0.5
4. LINEAR TOLERANCES:
   0.5-6 ±0.1
   OVER 6-30 ±0.2
   OVER 30-120 ±0.3
   OVER 120-315 ±0.5
   OVER 315-1000 ±0.8
   OVER 1000-2000 ±1.2
5. ANGULAR TOLERANCES: 0° 30′

CONTRACT	NAS3-27600
CONTRACTOR	ADF, INC.
TASK ORDER	60
DRAFTER	ADF/W. HOLT
ENGINEER	ANLX/J. CZERNEC
DESIGNER	ADF/J. VAN TASSEL

THIRD ANGLE PROJECTION

NATIONAL AERONAUTICS AND SPACE ADMINISTRATION
JOHN H. GLENN RESEARCH CENTER
LEWIS FIELD
CLEVELAND, OHIO

MANUAL VENT VALVE MANIFOLD ASSEMBLY

67212MELM240

241 MANUAL VENT VALVE MANIFOLD

PDM REL LEVEL: **RELEASE** PDM REVISION: -.3
PDM DATABASE: FCF
MODEL NAME: 67212MEDM241
PRIOR TO USE VERIFY THE INTENDED PURPOSE IN PDM ('FOR' ATTRIBUTE)

SIZE	DRAWING NUMBER	REV	BLDG	AREA
A0	67212MEDM241	A	333	-
			UNITS: mm	
SCALE: 1:1	INITIAL REL DATE 05/14/99	SHEET 1 OF 1	DISCIPLINE MECHANICAL	

PRO/E VERSION: 19.0

SIZE A0 DOCUMENT NUMBER 67212MEDM241 REV A

NAME:EDEA OBJECT:67212MEDM241 DATE:30-Oct-08 11:19:54