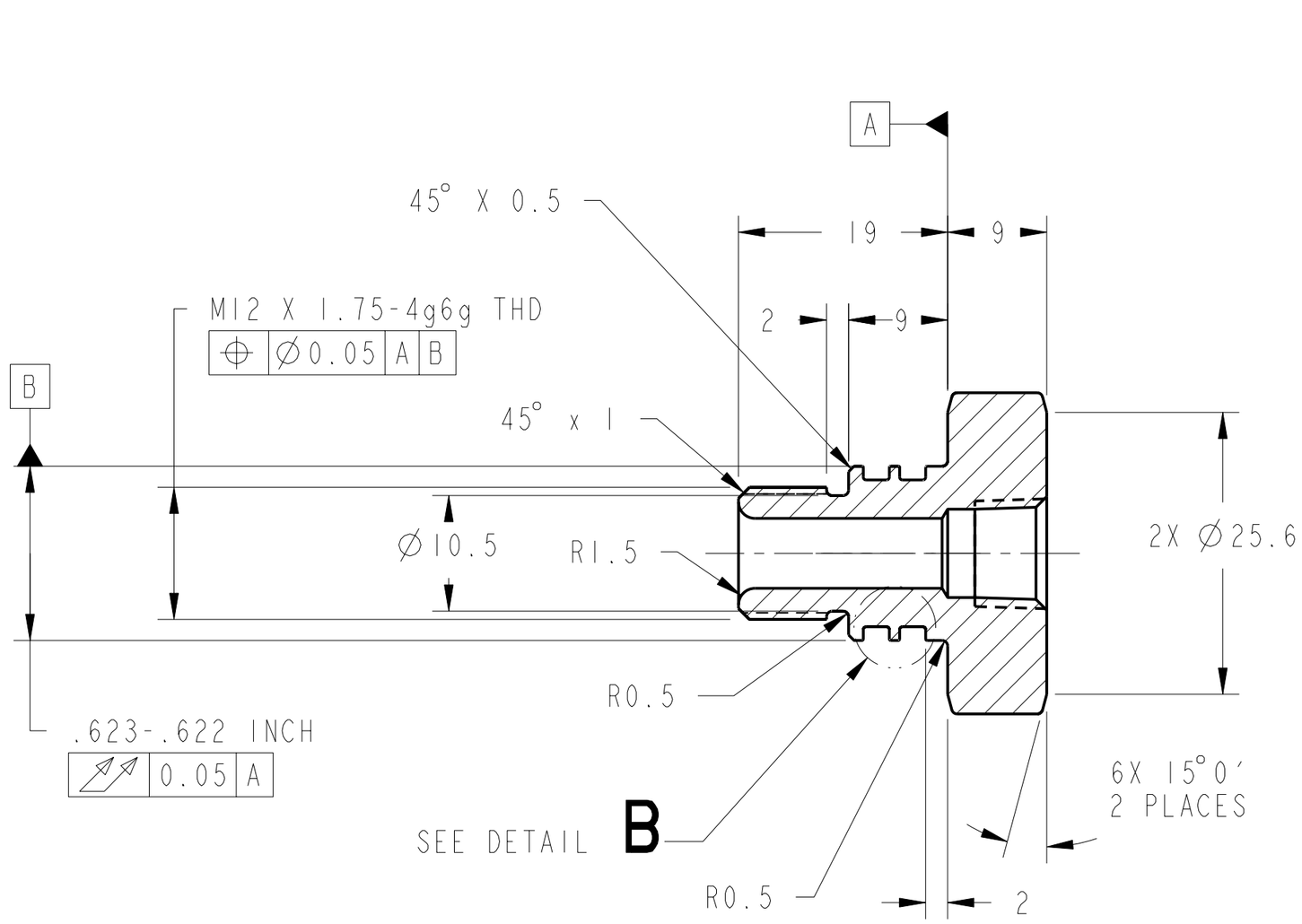

SECTION **A-A**

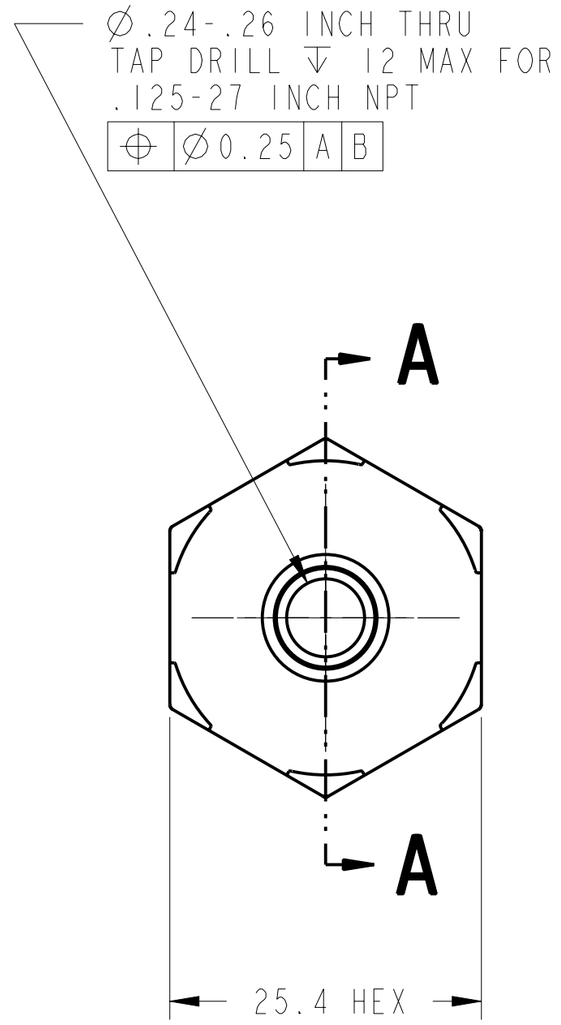

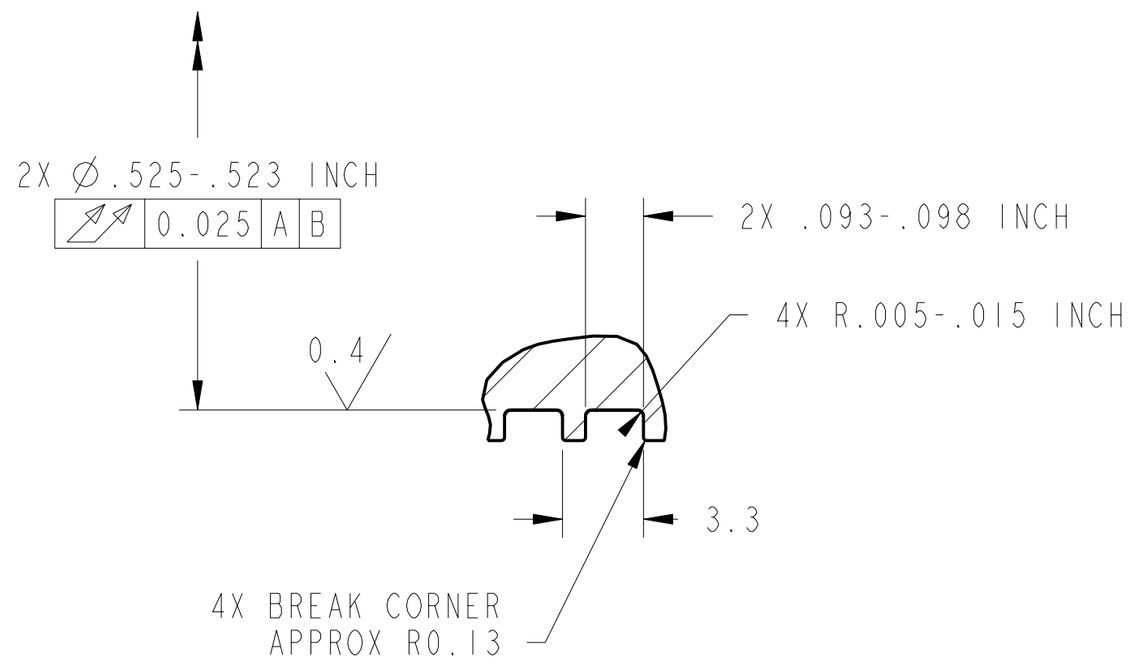

DETAIL **B**
SCALE 4:1

1. MATERIAL:
   TYPE 304 STAINLESS STEEL PER FEDERAL SPEC QQ-S-763 OR QQ-S-766.
2. CERTIFICATE OF CONFORMANCE REQUIRED FOR MATERIAL.
3. 1.6 Ra ALL OVER UNLESS OTHERWISE NOTED PER ANSI/ASME B46.1.}
4. CLEAN AND PASSIVATE PER MIL-S-5002,} PARAGRAPHS 3.4.2.4 AND 3.4.2.4.1, AND FEDERAL SPECIFICATION QQ-P-35.
5. CLEAN SURFACES WITH 190 PROOF ETHYL ALCOHOL. WIPE WITH CLEAN COTTON SWABS AND/OR LINT-FREE CLOTH.
6. IDENTIFY BY TAGGING WITH DRAWING PART NUMBER 67212MEDM234, PER SAE AS478, METHOD 35.
7. HANDLE WITH CLEAN, LINT-FREE GLOVES.
8. BEFORE STORAGE, PROTECT PART WITH CONTAMINATION BARRIER. USE CLEAN, NEW, TRANSPARENT, POLYETHYLENE BAG SEALED WITH FIBERGLASS PACKAGING TAPE. SEAL AND MARK WITH IDENTIFICATION NUMBER ON TAG ATTACHED TO BAG.
9. PROCESS PLAN REQUIRED.
10. ESTIMATED WEIGHT= 0.051 Kg.

CHG	ZONE	DESCRIPTION	APP/DATE

REVISIONS

UNLESS OTHERWISE SPECIFIED:
1. ALL DIMENSIONING AND TOLERANCING PER ASME Y14.5M-1994
2. ALL DIMENSIONS ARE IN MILLIMETERS
3. BREAK EDGES: 0.2-0.5
4. LINEAR TOLERANCES:
   0.5-6 ±0.1
   OVER 6-30 ±0.2
   OVER 30- 120 ±0.3
   OVER 120-315 ±0.5
   OVER 315-1000 ±0.8
   OVER 1000-2000 ±1.2
5. ANGULAR TOLERANCES: 0° 30′

CONTRACT	NAS3-27600
CONTRACTOR	ADF, INC.
TASK ORDER	060
DRAFTER	D.ROBINSON
ENGINEER	D.CATALANO
DESIGNER	D.ROBINSON

THIRD ANGLE PROJECTION

NATIONAL AERONAUTICS AND SPACE ADMINISTRATION
JOHN H. GLENN RESEARCH CENTER
LEWIS FIELD
CLEVELAND, OHIO

EXHAUST MANIFOLD ASSEMBLY

67212MELM230

234 MINI-GAUGE ADAPTER FITTING

PDM REL LEVEL: **RELEASE** PDM REVISION: **-.1**
PDM DATABASE: **FCF**
MODEL NAME: **67212MEDM234**
PRIOR TO USE VERIFY THE INTENDED PURPOSE IN PDM ("FOR" ATTRIBUTE)

SIZE	DRAWING NUMBER	REV	BLDG	AREA
A2	67212MEDM234	-	333	-
			UNITS: mm	
SCALE: 2:1	INITIAL REL DATE 07/26/99	SHEET 1 OF 1	DISCIPLINE MECHANICAL	

PRO/E VERSION: 18.0

DRAWING NUMBER 67212MEDM234
SIZE A2
REV -

NAME:EDJEN OBJECT:67212MEDM234 DATE:30-Oct-00 11:16:24