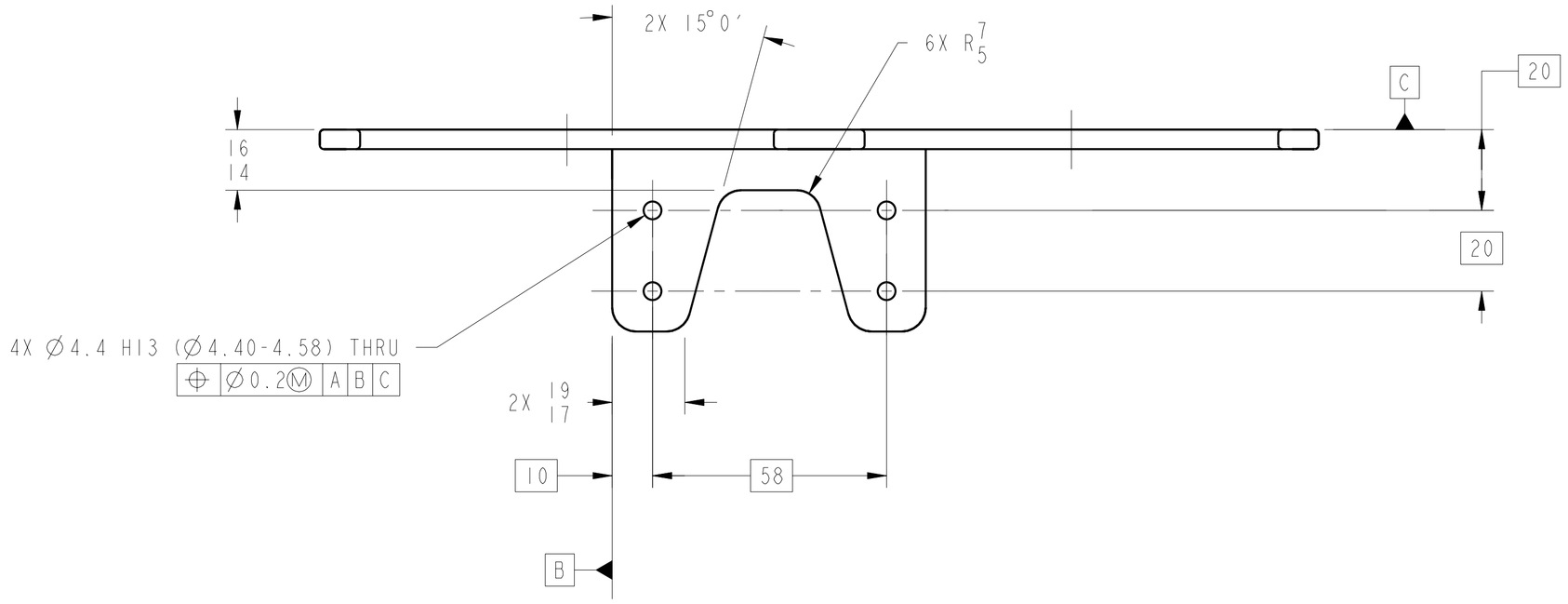

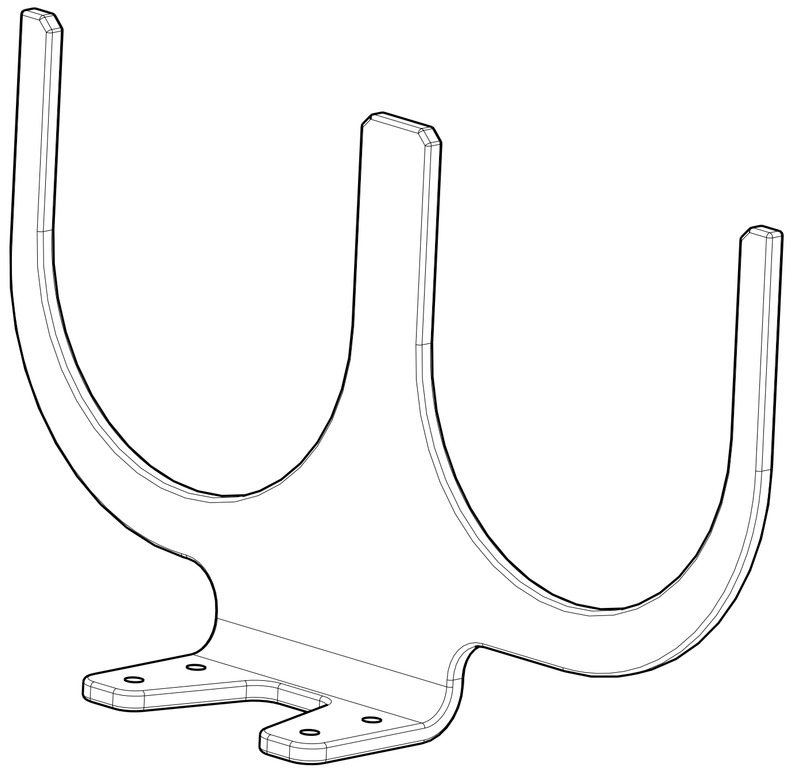

ISO VIEW

TANGENT EDGE LINES SHOWN

1. MATERIAL: .190 THICK 5052-H22 ALUMINUM PER FEDERAL SPEC ASTM B241.
2. CERTIFICATE OF CONFORMANCE REQUIRED FOR MATERIAL.
3. 3.2 Ra ALL MACHINED SURFACES PER ANSI/ASME B46.1.
4. ALL OUTSIDE CORNERS TO BE R1 UNLESS OTHERWISE SPECIFIED.
5. HARD BLACK ANODIZE PER MIL-A-8625, TYPE III, CLASS 2, .001-.002 INCH THICK. ALL DIMENSIONS APPLY AFTER ANODIZING.
6. ELECTROCHEMICAL ETCH DRAWING PART NUMBER 67212MEDM232 ON SPECIFIED SURFACE, PER SAE AS478, METHOD 7A (ZONE B6).
7. CLEAN SURFACES WITH 190 PROOF ETHYL ALCOHOL. WIPE WITH CLEAN COTTON SWABS AND/OR LINT-FREE CLOTH.
8. HANDLE WITH CLEAN LINT-FREE GLOVES.
9. BEFORE STORAGE, PROTECT WITH CONTAMINATION BARRIER. USE CLEAN, NEW, TRANSPARENT, POLYETHYLENE BAG SEALED WITH FIBERGLASS PACKAGING TAPE. SEAL AND MARK WITH IDENTIFICATION NUMBER ON TAG ATTACHED TO BAG.
10. PROCESS PLAN REQUIRED.
11. ESTIMATED WEIGHT: .162 Kg.

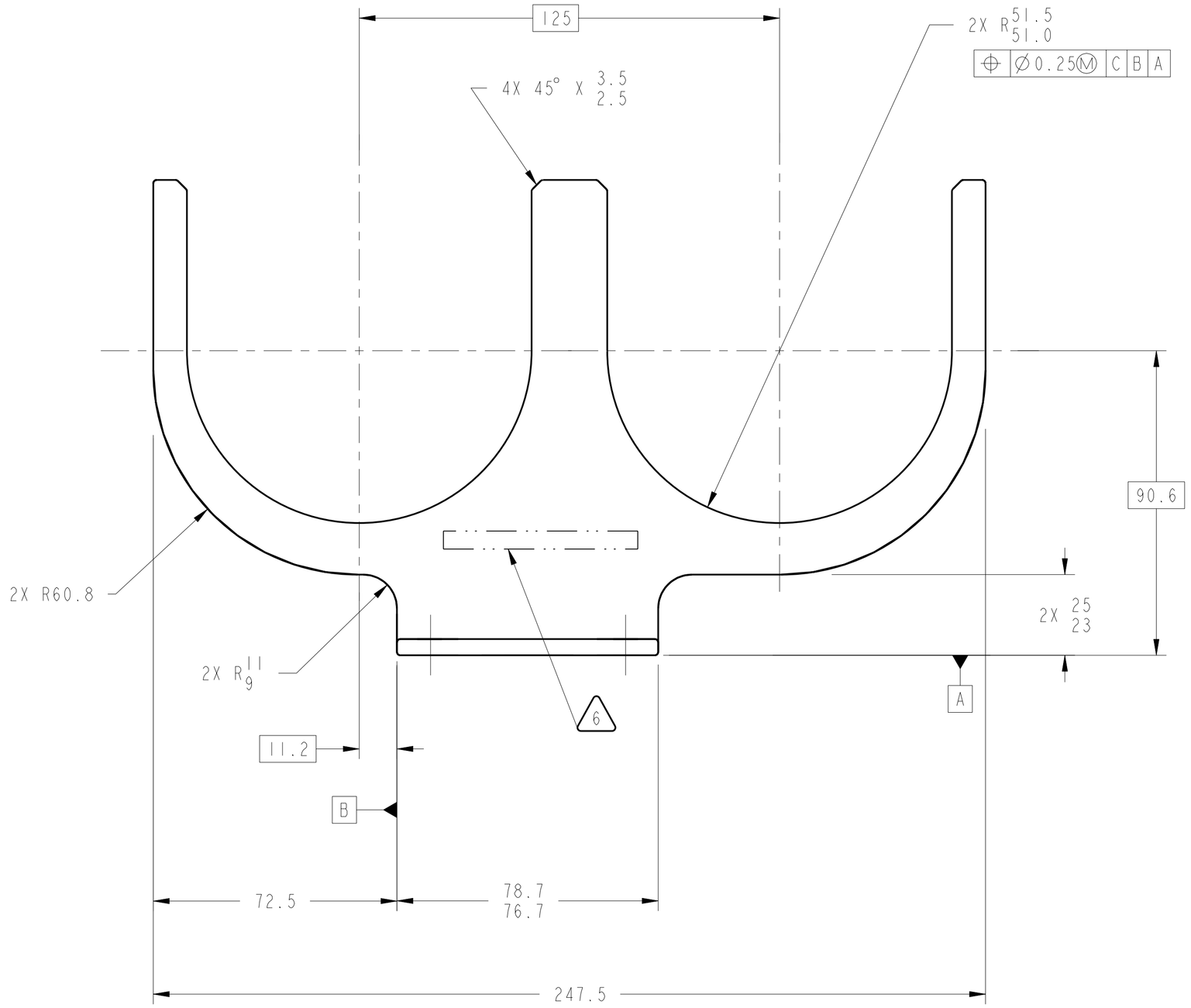

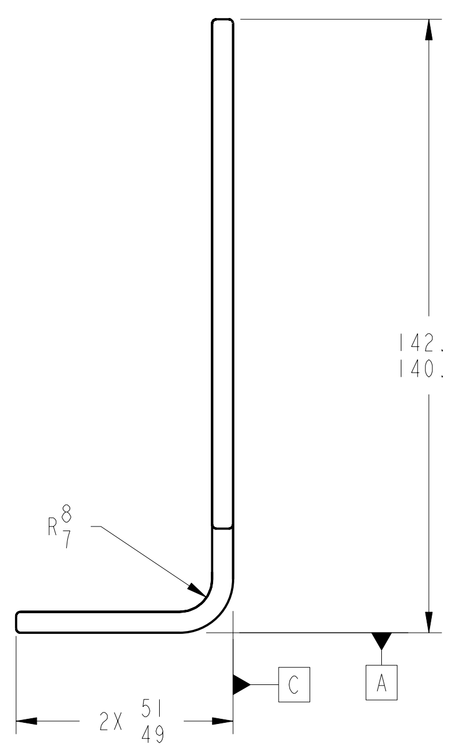

UNLESS OTHERWISE SPECIFIED:
1. ALL DIMENSIONING AND TOLLERANCING PER ASME Y14.5M-1994
2. ALL DIMENSIONS ARE IN MILLIMETERS
3. BREAK EDGES: 0.2-0.5
4. LINEAR TOLERANCES:
   0.5-6 ±0.1
   OVER 6-30 ±0.2
   OVER 30- 120 ±0.3
   OVER 120-315 ±0.5
   OVER 315-1000 ±0.8
   OVER 1000-2000 ±1.2
5. ANGULAR TOLERANCES: 0° 30′

METRIC

THIRD ANGLE PROJECTION

DRAFTER	ADF/N. SMITH
DESIGNER	ADF/J. VAN TASSEL
ENGINEER	ANLX/J. CZERNEC
MODEL NAME: 67212MEDM232	
PRO/E VERSION: 19.0	
RELEASE DATE: XX/XX/XX	

CHG	ZONE	DESCRIPTION	APP/DATE

REVISIONS

NATIONAL AERONAUTICS AND SPACE ADMINISTRATION
LEWIS RESEARCH CENTER
CLEVELAND, OHIO

232 BOTTLE SUPPORT BRACKET

EXHAUST MANIFOLD ASSEMBLY
67212MELM230

DRAFT COPY

SIZE	DRAWING NUMBER	REV	STAT	BLDG/CELL
A1	67212MEDM232	-	-	333/-

SCALE: 1:1 SHEET 1 OF 1

DRAWING NUMBER 67212MEDM232 REV - STAT -

NAME:EDJEN OBJECT:67212MEDM232 DATE:30-Oct-00 11:15:47