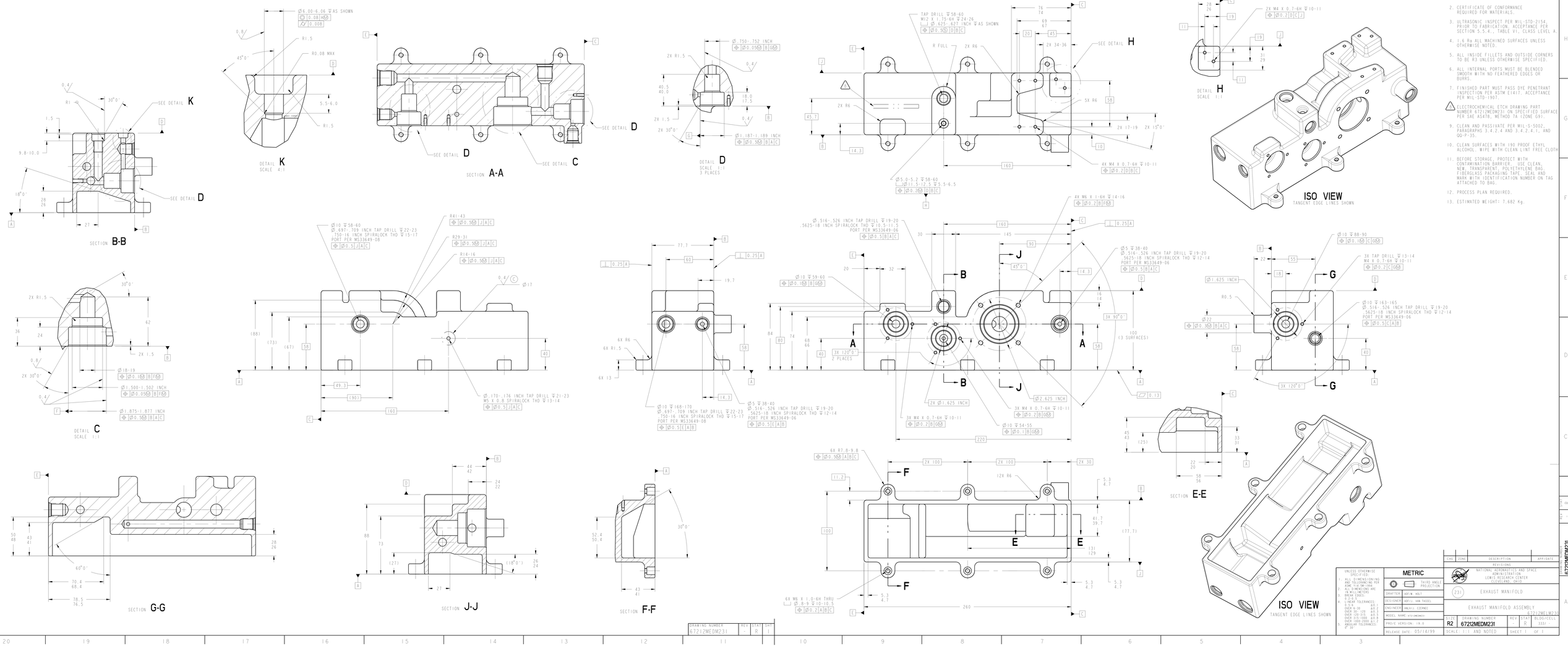

1. MATERIAL: TYPE 316 STAINLESS STEEL, PER QQ-S-766.
2. CERTIFICATE OF CONFORMANCE REQUIRED FOR MATERIALS.
3. ULTRASONIC INSPECT PER MIL-STD-2154, PRIOR TO FABRICATION. ACCEPTANCE PER SECTION 5.5.4., TABLE VI, CLASS LEVEL A.
4. 1.6 Ra ALL MACHINED SURFACES UNLESS OTHERWISE NOTED.
5. ALL INSIDE FILLETS AND OUTSIDE CORNERS TO BE R3 UNLESS OTHERWISE SPECIFIED.
6. ALL INTERNAL PORTS MUST BE BLENDED SMOOTH WITH NO FEATHERED EDGES OR BURRS.
7. FINISHED PART MUST PASS DYE PENETRANT INSPECTION PER ASTM E1417. ACCEPTANCE PER MIL-STD-1907.
8. ELECTROCHEMICAL ETCH DRAWING PART NUMBER-67212MEDM231 ON SPECIFIED SURFACE PER SAE AS478, METHOD TA (ZONE G9).
9. CLEAN AND PASSIVATE PER MIL-S-5002, PARAGRAPHS 3.4.2.4 AND 3.4.2.4.1, AND QQ-P-35.
10. CLEAN SURFACES WITH 190 PROOF ETHYL ALCOHOL. WIPE WITH CLEAN LINT-FREE CLOTH.
11. BEFORE STORAGE, PROTECT WITH CONTAMINATION BARRIER. USE CLEAN, NEW, TRANSPARENT, POLYETHYLENE BAG, FIBERGLASS PACKAGING TAPE. SEAL AND MARK WITH IDENTIFICATION NUMBER ON TAG ATTACHED TO BAG.
12. PROCESS PLAN REQUIRED.
13. ESTIMATED WEIGHT: 7.682 Kg.

CHG	ZONE	DESCRIPTION	APP/DATE

REVISIONS

UNLESS OTHERWISE SPECIFIED:
1. ALL DIMENSIONING AND TOLERANCING PER ASME Y14.5M-1994.
2. ALL DIMENSIONS ARE IN MILLIMETERS.
3. BREAK EDGES 0.2-0.5.
4. LINEAR TOLERANCES: OVER 0-30 ±0.1; OVER 30-120 ±0.3; OVER 120-315 ±0.5; OVER 315-1000 ±0.8; OVER 1000-2000 ±1.2
5. ANGULAR TOLERANCES: 0° ±0°

METRIC

THIRD ANGLE PROJECTION

DRAFTER	ADF(M. HOLT)	
DESIGNER	ADF(J. VAN TASSEL)	
ENGINEER	VAL(F. CERNEC)	
MODEL NAME	4711(MEDM231)	
PROJE VERSION:	19.0	
RELEASE DATE:	05/14/99	

NATIONAL AERONAUTICS AND SPACE ADMINISTRATION
LEWIS RESEARCH CENTER
CLEVELAND, OHIO

231

EXHAUST MANIFOLD

EXHAUST MANIFOLD ASSEMBLY

67212MEDM231

SIZE	DRAWING NUMBER	REV	STAT	BLOCK/CELL
R2	67212MEDM231	-	R	333/-

SCALE: 1:1 AND NOTED | SHEET 1 OF 1

DRAWING NUMBER	REV	STAT	SHT
67212MEDM231	-	R	1

67212MEDM231

MAX USER: MEDITUSMMH - 08:09:06 11:13:04