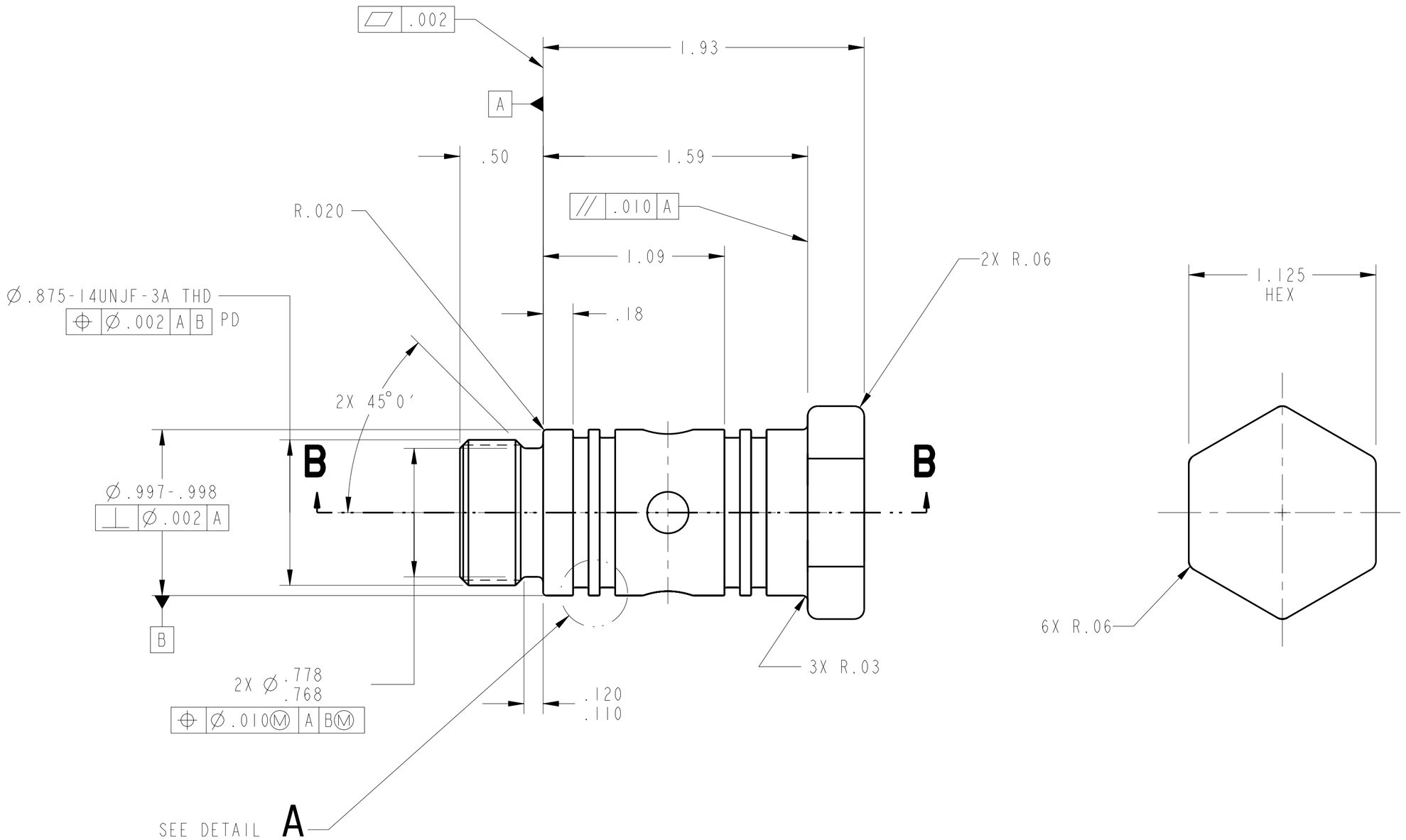

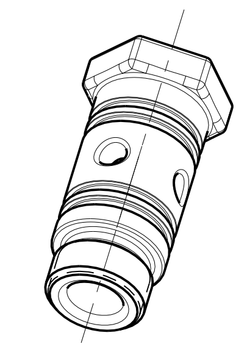

ISO VIEW

SCALE 1/1

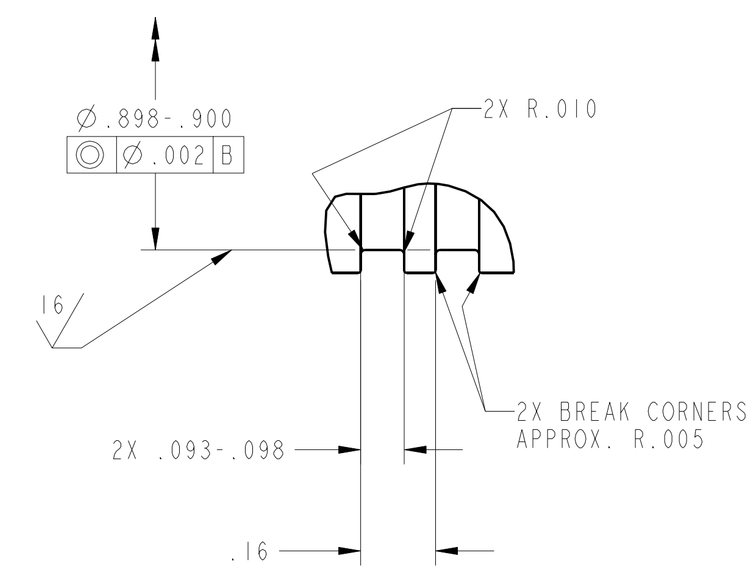

DETAIL A
SCALE 4/1
2 PLACES

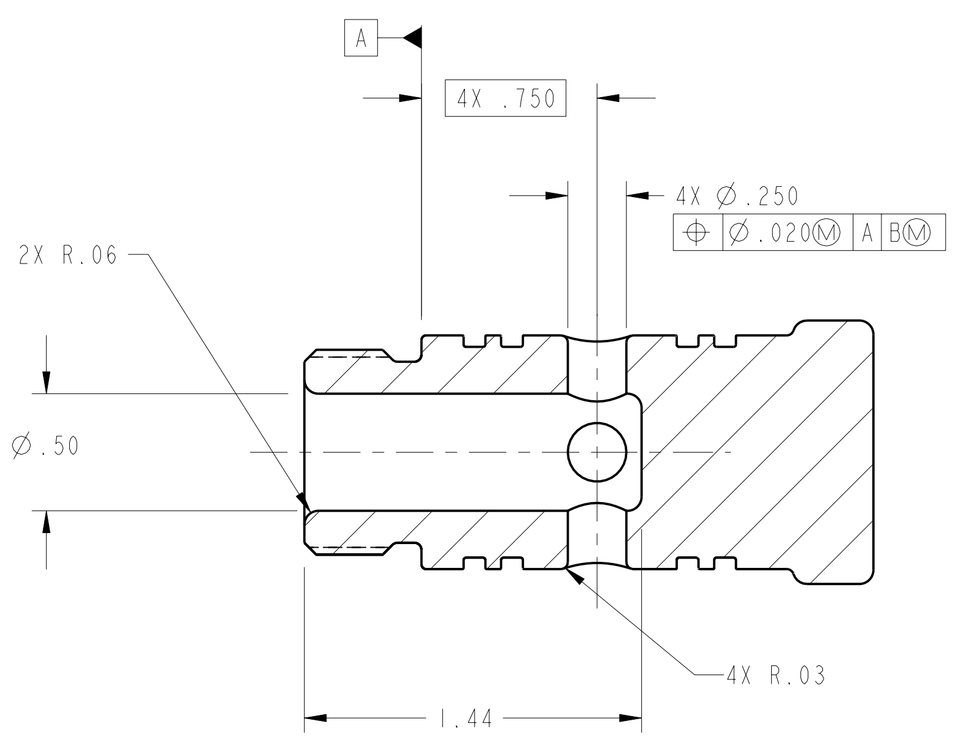

SECTION B-B

1. MATERIAL:
   TYPE 316 STAINLESS STEEL PER FEDERAL SPEC ASTM A276.
2. CERTIFICATE OF CONFORMANCE REQUIRED FOR MATERIALS.
3. ULTRASONIC INSPECT PER MIL-STD-2154, PRIOR TO FABRICATION. ACCEPTANCE PER SECTION 5.5.4., TABLE VI, CLASS LEVEL A.
4. 32 Ra ALL MACHINED SURFACES UNLESS OTHERWISE NOTED.
5. CLEAN AND PASSIVATE PER MIL-S-5002, PARAGRAPHS 3.4.2.4 AND 3.4.2.4.1 AND FEDERAL SPECIFICATION QQ-P-35.
6. FINISHED PART MUST PASS DYE PENETRANT INSPECTION PER ASTM E1417. ACCEPTANCE PER MIL-STD-1907.
7. IDENTIFY BY TAGGING WITH DRAWING PART NUMBER 67212MEDM228, PER SAE AS478, METHOD 35.
8. CLEAN SURFACES WITH 190 PROOF ETHYL ALCOHOL. WIPE WITH CLEAN COTTON SWABS AND/OR LINT-FREE CLOTH.
9. HANDLE WITH CLEAN LINT-FREE GLOVES.
10. BEFORE STORAGE, PROTECT WITH CONTAMINATION BARRIER. USE CLEAN, NEW, TRANSPARENT, POLYETHYLENE BAG SEALED WITH FIBERGLASS PACKAGING TAPE. SEAL AND MARK WITH IDENTIFICATION NUMBER ON TAG ATTACHED TO BAG.
11. PROCESS PLAN REQUIRED.
12. ESTIMATED WEIGHT= 0.376 Lb.

CHG	ZONE	DESCRIPTION	APP/DATE

REVISIONS

PRIOR TO USE VERIFY THE INTENDED PURPOSE IN PDM ("FOR" ATTRIBUTE)

UNLESS OTHERWISE SPECIFIED DIMENSIONS ARE IN INCHES

CONTRACT NAS3-27600
CONTRACTOR ADF, INC.

TOLERANCE ON		TASK ORDER	60
.X	± 0.03	DRAFTER	ADF/D.ROBINSON
.XX	± 0.01	ENGINEER	ANLX/I.DRALYUK
.XXX	± 0.005	DESIGNER	ADF/D.ROBINSON
FRACTION	± -	DIMENSIONING AND TOLERANCING PER ASME Y14.5M-1994	
ANGULAR	± 0.50°		
BREAK EDGES	XXX		

PDM REL LEVEL: RELEASE PDM REVISION: x.6
PDM DATABASE: FCF
MODEL NAME: 67212MEDM228
CHECK FOR ANY OUTSTANDING ECO'S PRIOR TO USE

NATIONAL AERONAUTICS AND SPACE ADMINISTRATION
JOHN H. GLENN RESEARCH CENTER
LEWIS FIELD
CLEVELAND, OHIO

EVP MFC AND MOUNTING PLATE ASSEMBLY
67212MELM226

228 EVP MFC ADAPTOR FITTING

SIZE	DRAWING NUMBER	REV	BLDG	AREA
D	67212MEDM228	-	333	-
			UNITS: INCH	

SCALE:	INITIAL REL DATE	SHEET	DISCIPLINE
2/1	XX/XX/XXXX	1 OF 1	MECHANICAL

PRO/E VERSION: 20.0

SIZE D DRAWING NUMBER 67212MEDM228 REV -