COMMERCIAL PARTS LIST

PART TYPE	BALLOON NO	DESCRIPTION	QTY/ ASSY
C	1	METRIC LEE PLUG, "LEE" PART NUMBER PLGM0600020A (PLUG AND PIN)	4
C	2	INSERT, SCREW THREAD KEY LOCKED, 303 STAINLESS STEEL LIGHTWEIGHT, METRIC KNCML 5 X 0.8 (FOR M5 X 0.8 FASTENER)	2
C	3	XXX	4

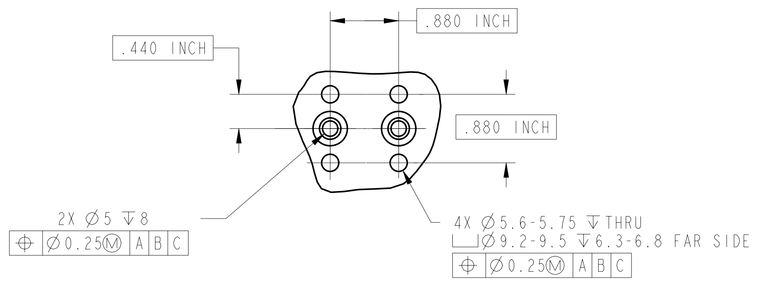

DETAIL D
SCALE 1:1

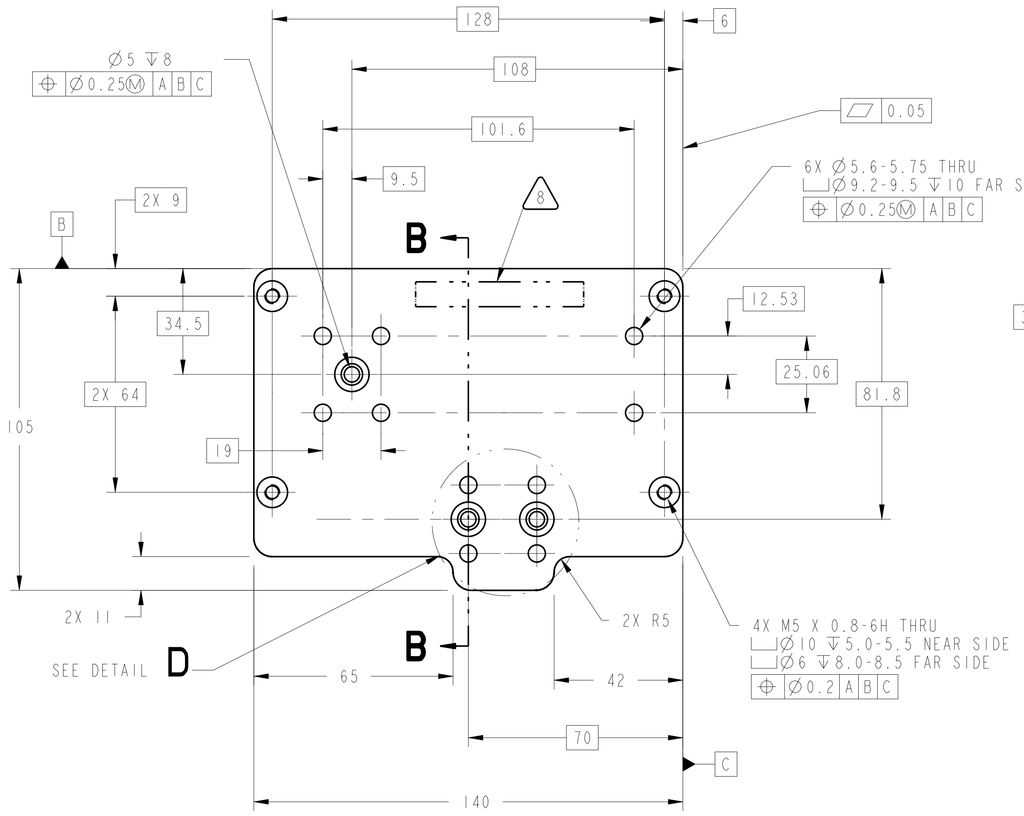

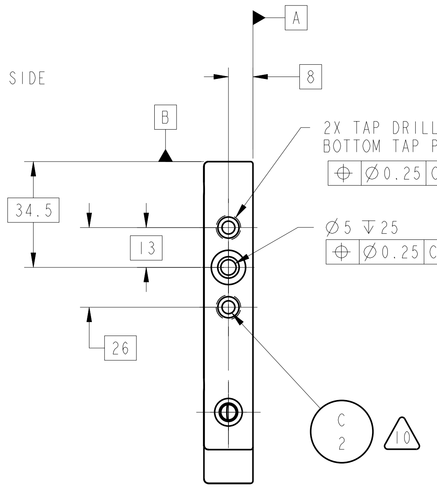

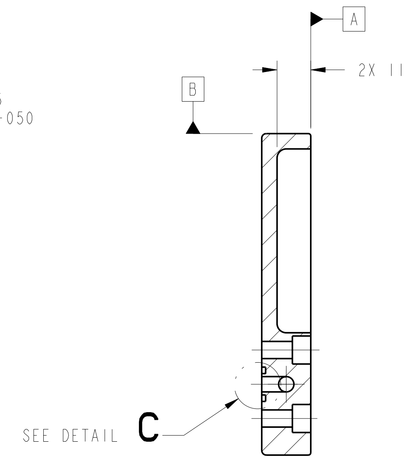

SECTION B-B

1. MATERIAL: 6061-T651 ALUMINUM PER FEDERAL SPEC QQ-A-250/11.
2. CERTIFICATE OF CONFORMANCE REQUIRED FOR MATERIALS.
3. ULTRASONIC INSPECT PER MIL-STD-2154, PRIOR TO FABRICATION. ACCEPTANCE PER SECTION 5.5.4., TABLE VI, CLASS LEVEL A.
4. 3.2 Ra ALL MACHINED SURFACES UNLESS OTHERWISE NOTED.
5. ALL OUTSIDE CORNERS TO BE R6 UNLESS OTHERWISE SPECIFIED.
6. ALL INSIDE FILLETS TO BE R3 UNLESS OTHERWISE SPECIFIED.
7. SURFACE TREAT ENTIRE PART PER MIL-C-5541. USE IRIDITE 14.2 OR APPROVED EQUIVALENT PER MIL-C-81706, CLASS 3, FORM 11, METHOD B OR C AS APPLICABLE, PRIOR TO INSTALLING KEENSERTS AND PLUGS. SPOT TOUCH UP BY METHOD B.)
8. INSTALL KEENSERT INSERTS AND PLUGS PER MANUFACTURERS' SPECIFICATIONS AFTER SURFACE TREATMENT PER NOTE 7.
9. FINISHED PART MUST PASS DYE PENETRANT INSPECTION PER ASTM E1417. ACCEPTANCE PER MIL-STD-1907.
10. ELECTROCHEMICAL ETCH DRAWING PART NUMBER 67212MEDM222 ON SPECIFIED SURFACE, PER SAE AS478, METHOD 7A (ZONE E7).
11. CLEAN SURFACES WITH 190 PROOF ETHYL ALCOHOL. WIPE WITH CLEAN COTTON SWABS AND/OR LINT-FREE CLOTH.
12. HANDLE WITH CLEAN LINT-FREE GLOVES.
13. BEFORE STORAGE, PROTECT WITH CONTAMINATION BARRIER. USE CLEAN, NEW, TRANSPARENT, POLYETHYLENE BAG SEALED WITH FIBERGLASS PACKAGING TAPE. SEAL AND MARK WITH IDENTIFICATION NUMBER ON TAG ATTACHED TO BAG.
14. PROCESS PLAN REQUIRED.
15. ESTIMATED WEIGHT= 0.441 Kg.

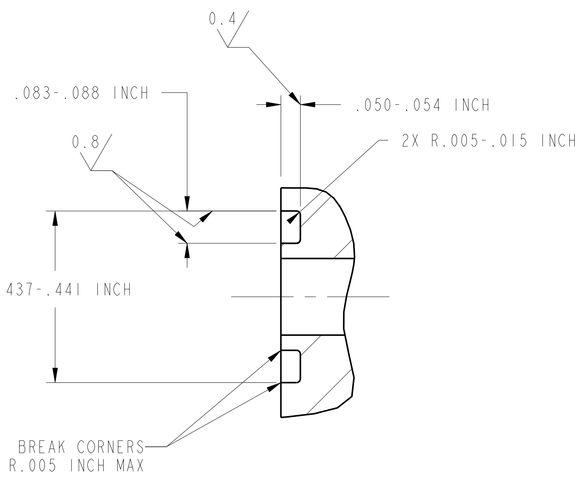

DETAIL C
SCALE 5:1
(4 PLACES)

3X ⌖ Ø0.13 A B C
1X ⌖ Ø0.13 C A B

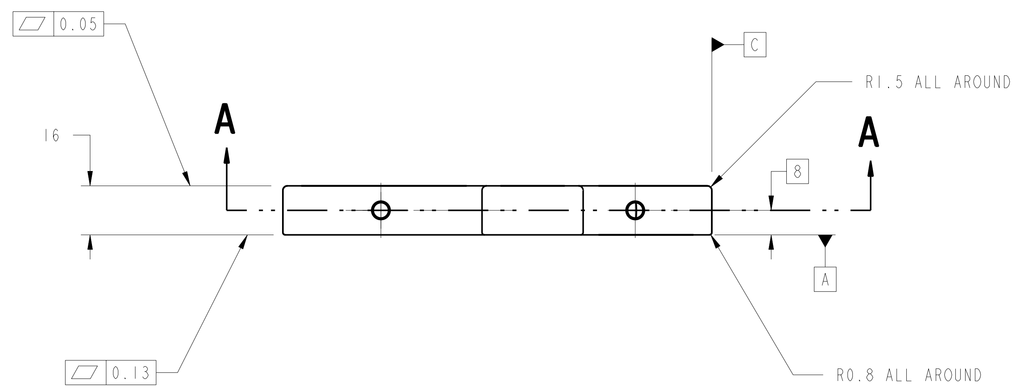

ISO VIEWS

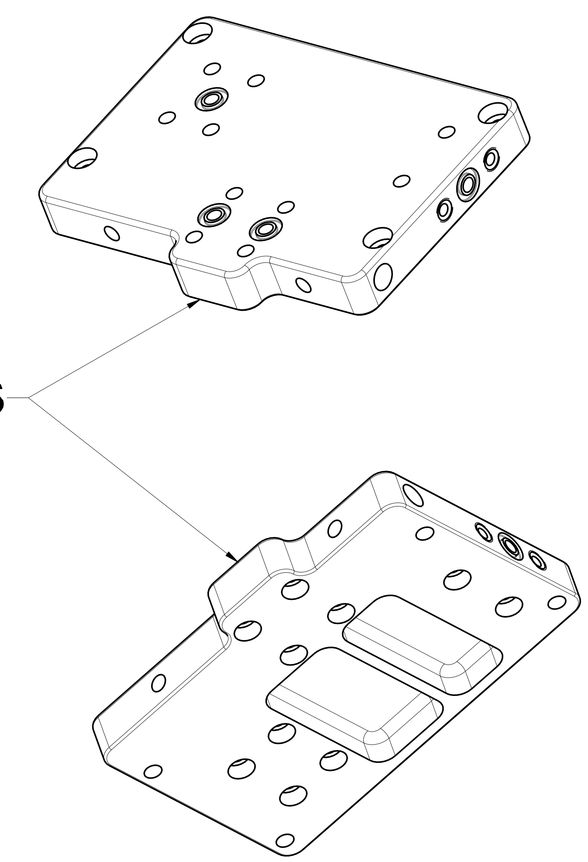

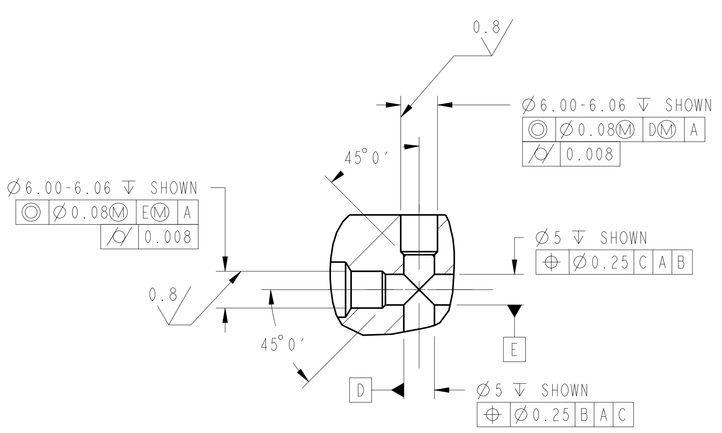

DETAIL E
SCALE 2:1
2 PLACES

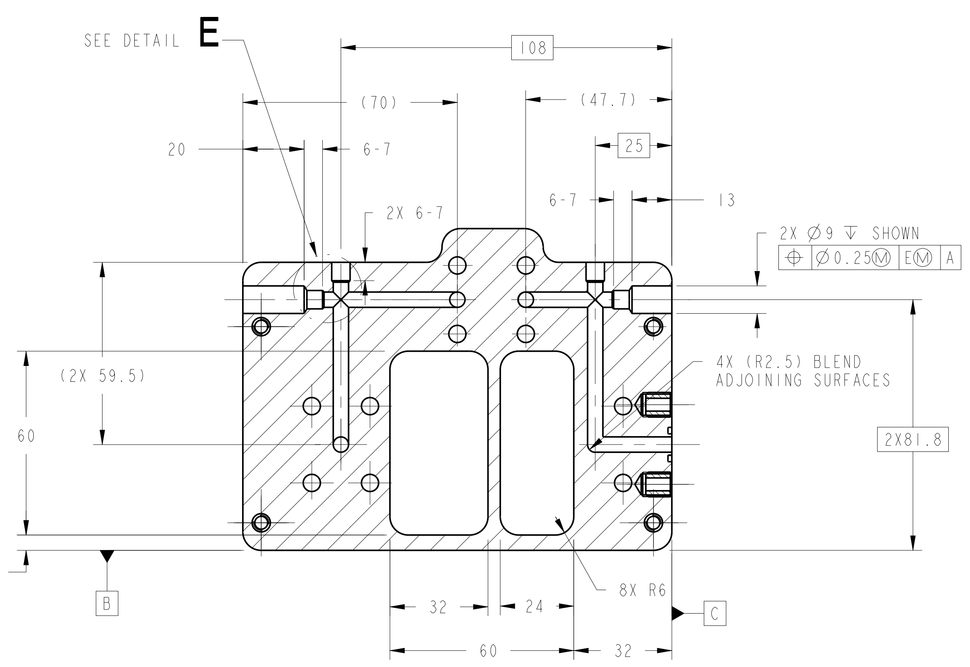

SECTION A-A

CHG	ZONE	DESCRIPTION	APP/DATE
B	F/D	REDESIGNED PART, UPDATED FORMAT TO A0 SIZE	D.ROBINSON 01/26/2000
A	A/B 4/7	INCH DIMS & GTOL WERE METRIC (Ø.184-.190 INCH)	D.ROBINSON 05/13/99

REVISIONS

PRIOR TO USE VERIFY THE INTENDED PURPOSE IN PDM ("FOR" ATTRIBUTE)

UNLESS OTHERWISE SPECIFIED:
1. ALL DIMENSIONING AND TOLERANCING PER ASME Y14.5M-1994
2. ALL DIMENSIONS ARE IN MILLIMETERS
3. BREAK EDGES: 0.2-0.5
4. LINEAR TOLERANCES:
   0.5-6 ±0.1
   OVER 6-30 ±0.2
   OVER 30-120 ±0.3
   OVER 120-315 ±0.5
   OVER 315-1000 ±0.8
   OVER 1000-2000 ±1.2
5. ANGULAR TOLERANCES: 0° 30'

CONTRACT	NAS3-27600
CONTRACTOR	ADF, INC.
TASK ORDER	60
DRAFTER	ADF/N.SMITH
ENGINEER	ANLX/J.CZERNEC
DESIGNER	ADF/J.VAN TASSEL

THIRD ANGLE PROJECTION

NATIONAL AERONAUTICS AND SPACE ADMINISTRATION
JOHN H. GLENN RESEARCH CENTER
LEWIS FIELD
CLEVELAND, OHIO

EVP MFC AND MOUNTING PLATE ASSEMBLY
67212MELM226

222 EVP MFC MOUNTING PLATE

PDM REL LEVEL: **BASELINE** PDM REVISION: -.4
PDM DATABASE: FCF
MODEL NAME: 67212MEDM222
CHECK FOR ANY OUTSTANDING ECO'S PRIOR TO USE

SIZE	DRAWING NUMBER	REV	BLDG	AREA
A0	67212MEDM222	B	333	-
SCALE: 1:1	INITIAL REL DATE 05/06/99	SHEET 1 OF 1	UNITS: mm	DISCIPLINE MECHANICAL

PRO/E VERSION: 19.0

A0 67212MEDM222 REV B

NAME:D.BEAR OBJECT:67212MEDM222 DATE:30-Oct-00 13:12:28