SCALE 1:1

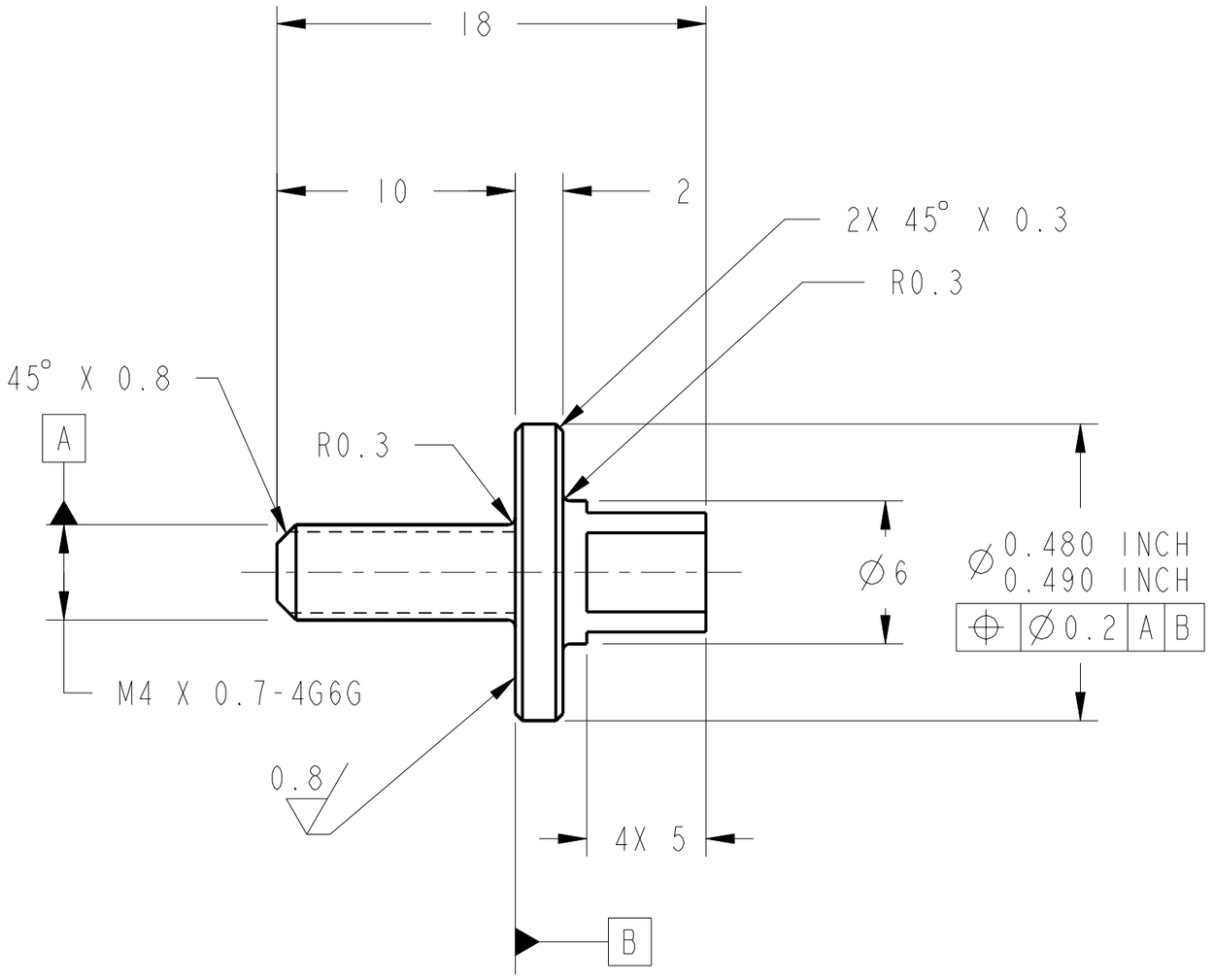

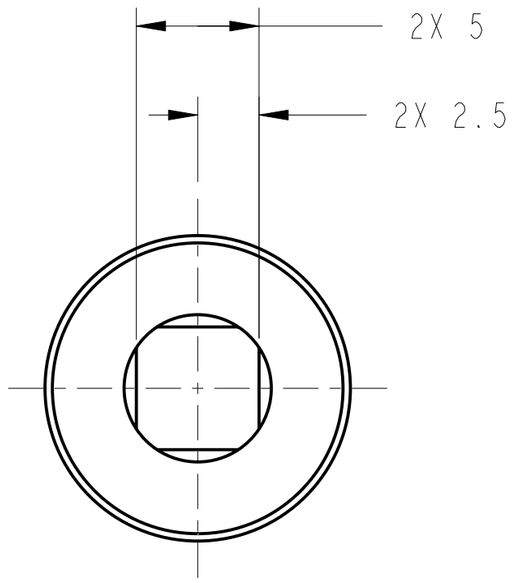

7. HANDLE WITH CLEAN, LINT-FREE GLOVES.

8. BEFORE STORAGE, PROTECT WITH CONTAMINATION BARRIER. USE CLEAN, NEW, TRANSPARENT, POLYETHYLENE BAG FOR SMALL ITEMS, OR 4 MIL THICK MINIMUM POLYETHYLENE SHEET SEALED WITH FIBERGLASS PACKAGING TAPE. SEAL AND MARK WITH IDENTIFICATION NUMBER ON TAG ATTACHED TO BAG.

8. PROCESS PLAN REQUIRED.

10. ESTIMATED WEIGHT = 0.004 Kg.

1. MATERIAL:
   316 STAINLESS STEEL PER SAE-AMS-QQ-S-763.

2. CERTIFICATE OF CONFORMANCE REQUIRED FOR MATERIAL.

3. 3.2 Ra ALL MACHINED SURFACES UNLESS OTHERWISE SPECIFIED.}

4. IDENTIFY BY TAGGING WITH DRAWING PART NUMBER 67212MEDM205, PER SAE AS478, METHOD 35.

5. CLEAN AND PASSIVATE PER SPECIFICATION SAE-AMS-QQ-P-35.

6. CLEAN SURFACES WITH 190 PROOF ETHYL ALCOHOL. WIPE WITH CLEAN COTTON SWABS AND/OR LINT-FREE CLOTH.

CHG	ZONE	DESCRIPTION	APP/DATE

REVISIONS

UNLESS OTHERWISE SPECIFIED:

1. ALL DIMENSIONING AND TOLERANCING PER ASME Y14.5M-1994
2. ALL DIMENSIONS ARE IN MILLIMETERS
3. BREAK EDGES: 0.2-0.5
4. LINEAR TOLERANCES:
   - 0.5-6 ±0.1
   - OVER 6-30 ±0.2
   - OVER 30- 120 ±0.3
   - OVER 120-315 ±0.5
   - OVER 315-1000 ±0.8
   - OVER 1000-2000 ±1.2
5. ANGULAR TOLERANCES: 0° 30′

CONTRACT	XXX
CONTRACTOR	XXX
TASK ORDER	XXX
DRAFTER	J. ASSION
ENGINEER	I. DRALYUK
DESIGNER	J. ASSION

THIRD ANGLE PROJECTION

NATIONAL AERONAUTICS AND SPACE ADMINISTRATION
JOHN H. GLENN RESEARCH CENTER
LEWIS FIELD
CLEVELAND, OHIO

BOTTLE SUPPORT BRACKET ASSEMBLY

67212MELM210

PIVOT PIN SCREW

PDM REL LEVEL: **RELEASE** PDM REVISION: **x.3**

PDM DATABASE: **FCF**

MODEL NAME: **67212MEDM205**

PRIOR TO USE VERIFY THE INTENDED PURPOSE IN PDM ("FOR" ATTRIBUTE)

SIZE	DRAWING NUMBER	REV	BLDG	AREA
A2	67212MEDM205	-	303	
			UNITS: mm	
SCALE: 4:1	INITIAL REL DATE 08/23/00	SHEET 1 OF 1	DISCIPLINE	

REV -

DRAWING NUMBER 67212MEDM205

SIZE A2

PRO/E VERSION: 2000i

NAME:EDJEN OBJECT:67212MEDM205 DATE:30-Oct-00 11:08:20