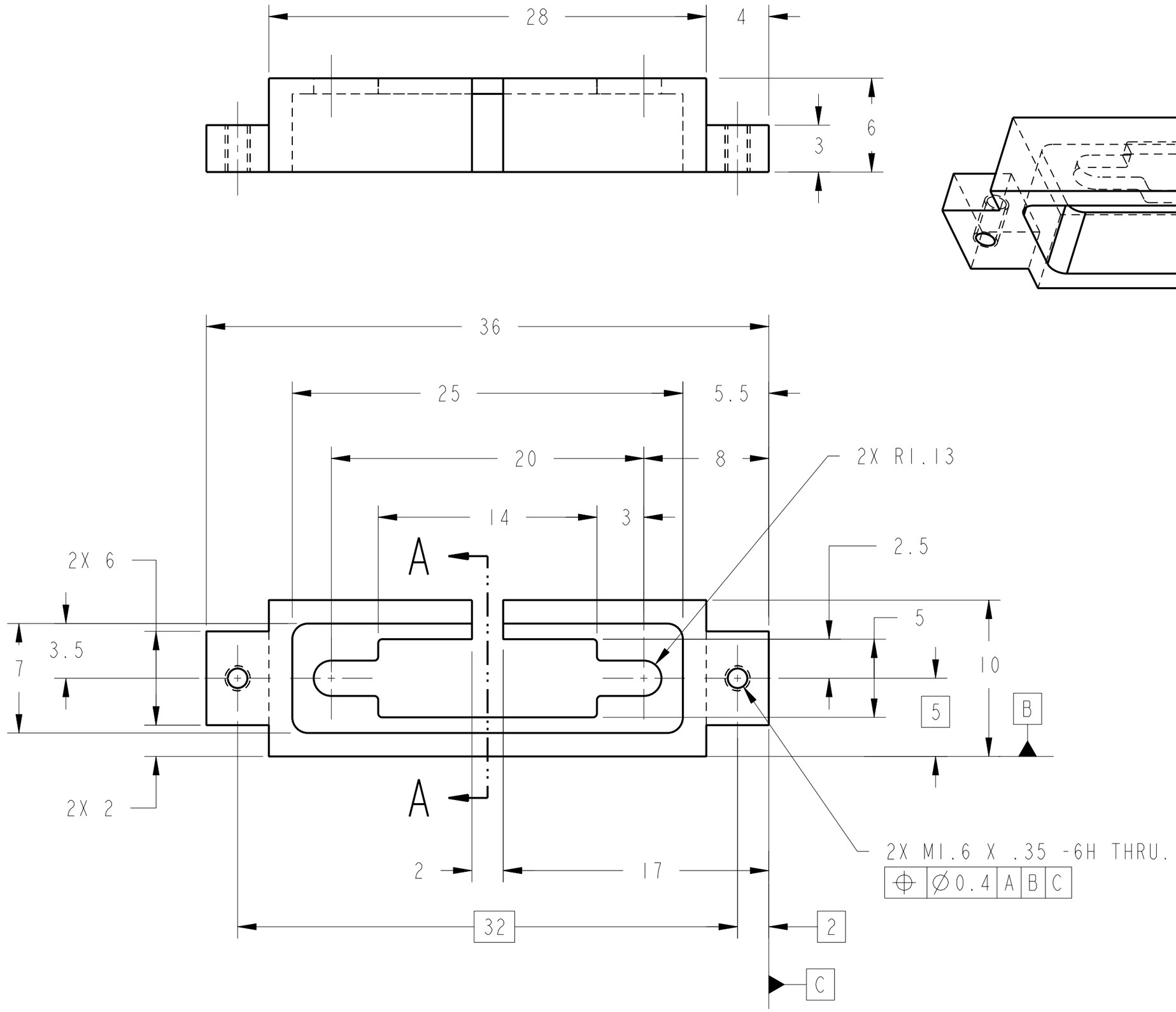

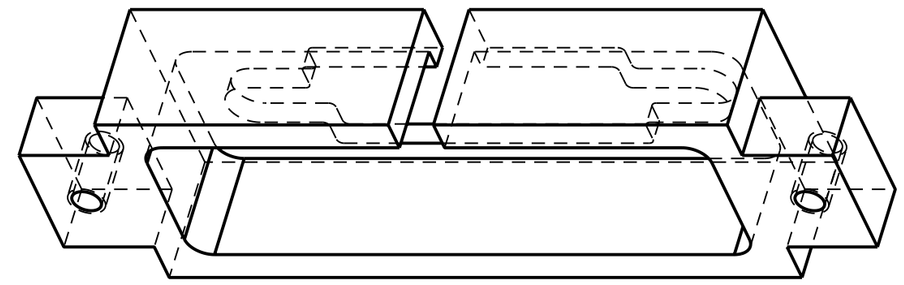

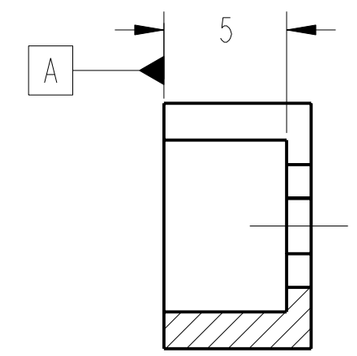

A-A

1. MATERIAL: 6061-T651 ALUMINUM PER SAE-AMS-QQ-A-250/11 OR ASTM B209
2. CERTIFICATION OF CHEMICAL AND MECHANICAL PROPERTIES IS REQUIRED.
3. 3.2 Ra ALL MACHINED SURFACES PER ANSI/ASME B46.1.
4. ALL INTERNAL RADII R1 UNLESS OTHERWISE NOTEED.
5. IDENTIFY BY TAGGING WITH DRAWING PART NUMBER 67212MEDM144 PER SAE AS479, METHOD 35.
6. SURFACE TREATMENT: CLASS 3 CHEMICAL CONVERSION COATING PER MIL-C-5541: YELLOW/GOLD; USE IRIDITE 14-2 (ref. MACDERMID INC.); APPLY BY BRUSH OR IMMERSION AS APPLICABLE. BRUSH AND/OR SWAB TOUCH UP PER MIL-C-5541 SEC. 3.4; USE IRIDITE 14-2 BRUSH-ON KIT. THE USE OF IRIDITE 14-2 EQUIVALENT(S) IS PROHIBITED UNLESS SPECIFICALLY APPROVED BY ENGINEERING.
7. CLEAN SURFACES WITH 190 PROOF ETHYL ALCOHOL. WIPE WITH CLEAN COTTON SWABS AND/OR LINT-FREE CLOTH.
8. BEFORE STORAGE, PROTECT WITH CONTAMINATION BARRIER. USE CLEAN, NEW, TRANSPARENT, POLYETHYLENE BAG SEALED WITH FIBERGLASS PACKAGING TAPE. SEAL AND MARK WITH IDENTIFICATION NUMBER ON TAG ATTACHED TO BAG.
9. PROCESS PLAN REQUIRED.
10. ESTIMATED WEIGHT: 0.002 Kg.

CHG	ZONE	DESCRIPTION	APP/DATE

REVISIONS

UNLESS OTHERWISE SPECIFIED:
1. ALL DIMENSIONING AND TOLERANCING PER ASME Y14.5M-1994
2. ALL DIMENSIONS ARE IN MILLIMETERS
3. BREAK EDGES: 0.2-0.5
4. LINEAR TOLERANCES:
   0.5-6 ±0.1
   OVER 6-30 ±0.2
   OVER 30- 120 ±0.3
   OVER 120-315 ±0.5
   OVER 315-1000 ±0.8
   OVER 1000-2000 ±1.2
5. ANGULAR TOLERANCES: 0° 30′

CONTRACT	NAS3-99155
CONTRACTOR	ANALEX CORP.
TASK ORDER	-
DRAFTER	LTHOMAS
ENGINEER	D.CATALNO
DESIGNER	LTHOMAS

THIRD ANGLE PROJECTION

NATIONAL AERONAUTICS AND SPACE ADMINISTRATION
JOHN H. GLENN RESEARCH CENTER
LEWIS FIELD
CLEVELAND, OHIO

MFC ENCLOSURE ASS'Y

67212MEDM142

M144 AIRBORN SUPPORT MOUNT

PDM REL LEVEL: **RELEASE** PDM REVISION: **x.3**

PDM DATABASE: **FCF**

MODEL NAME: **67212MEDM144**

PRIOR TO USE VERIFY THE INTENDED PURPOSE IN PDM ("FOR" ATTRIBUTE)

SIZE	DRAWING NUMBER	REV	BLDG	AREA
A2	67212MEDM144	-	110	117
			UNITS: mm	
SCALE: 4:1	INITIAL REL DATE 08/15/2000	SHEET 1 OF 1	DISCIPLINE MECH.	

PRO/E VERSION: 20.0

SIZE A2 DRAWING NUMBER 67212MEDM144 REV -

NAME:EDJEN OBJECT:67212MEDM144 DATE:30-Oct-00 11:05:57