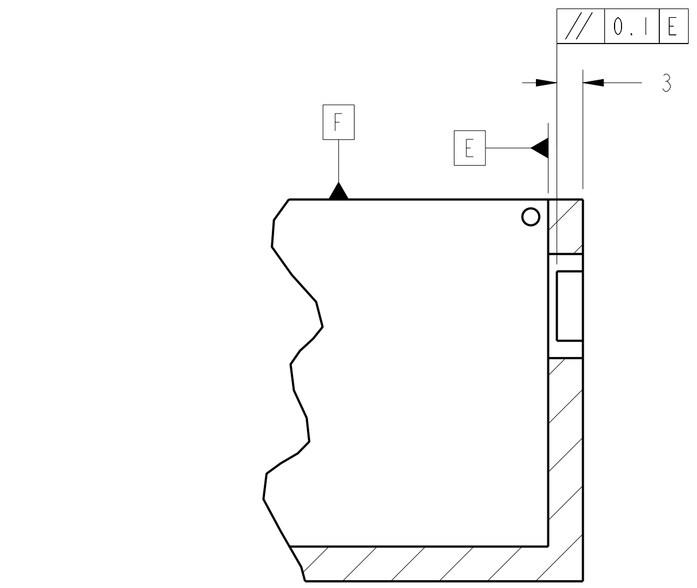

A-A
SCALE: 2:1

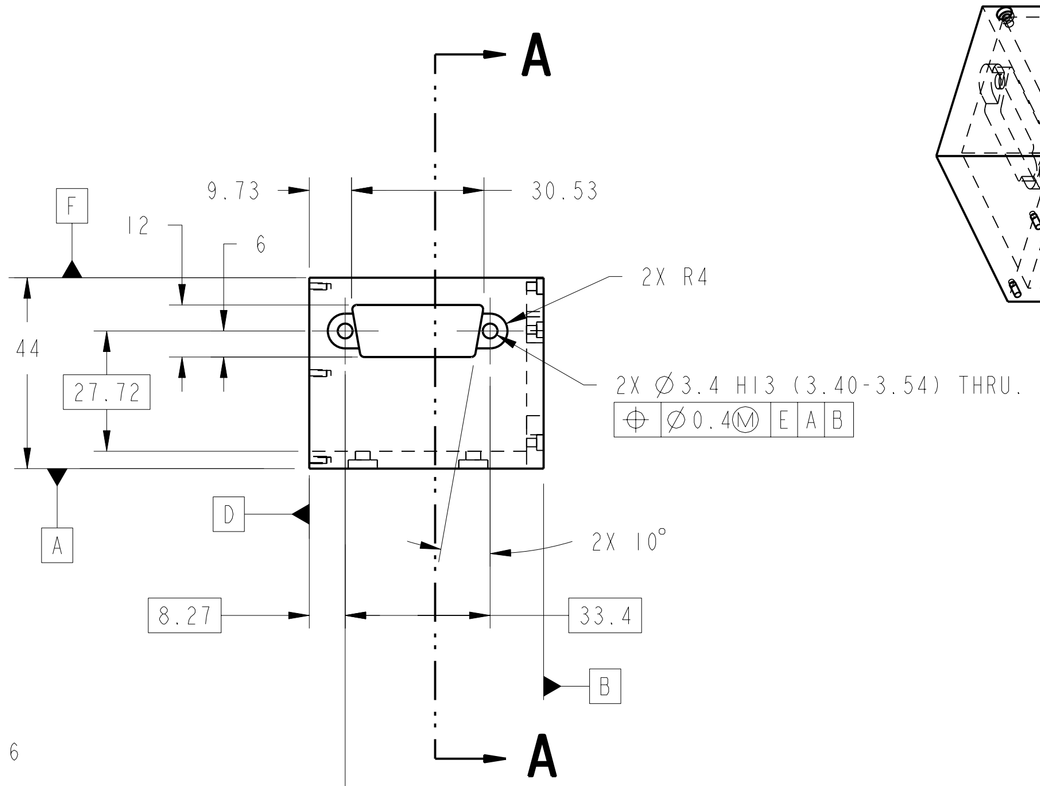

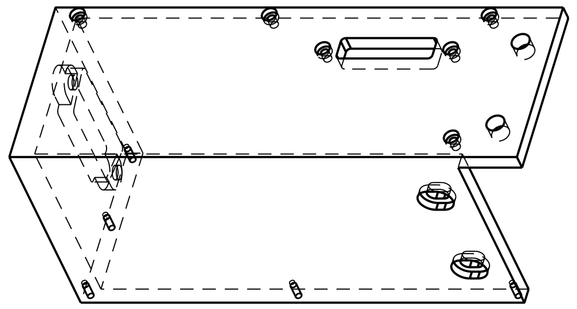

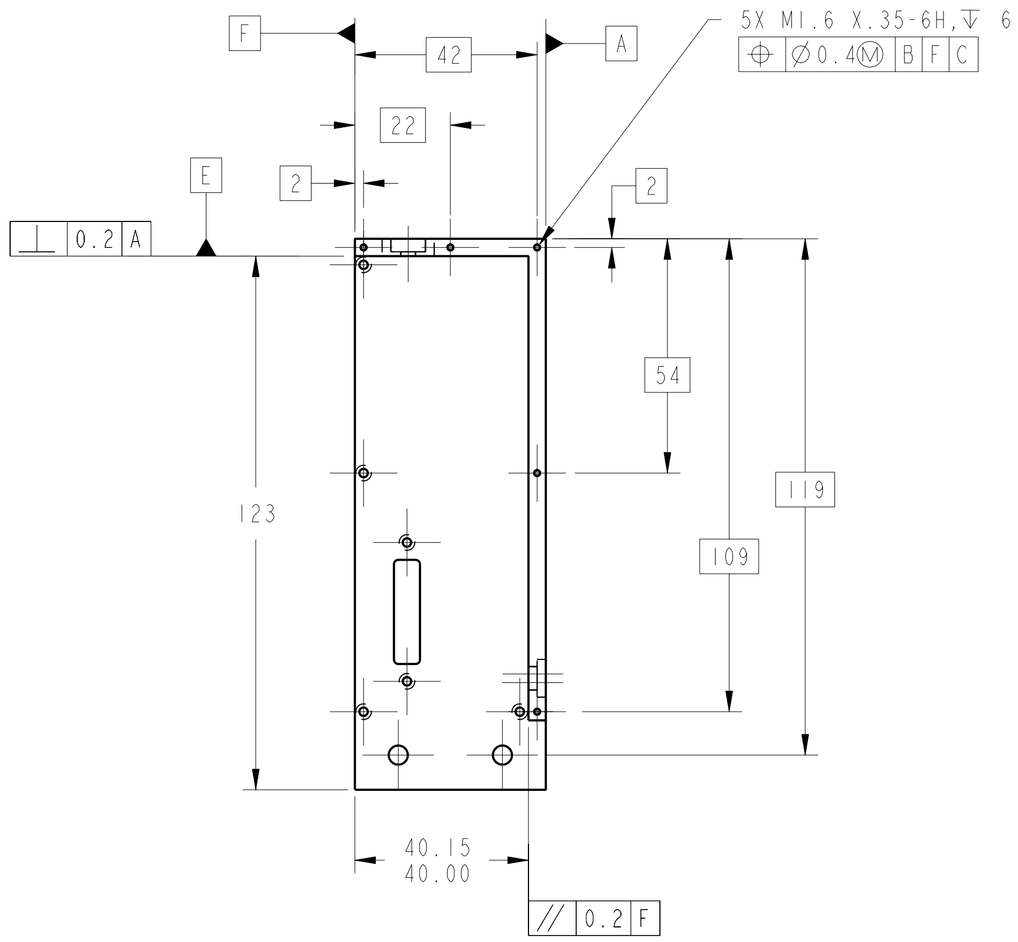

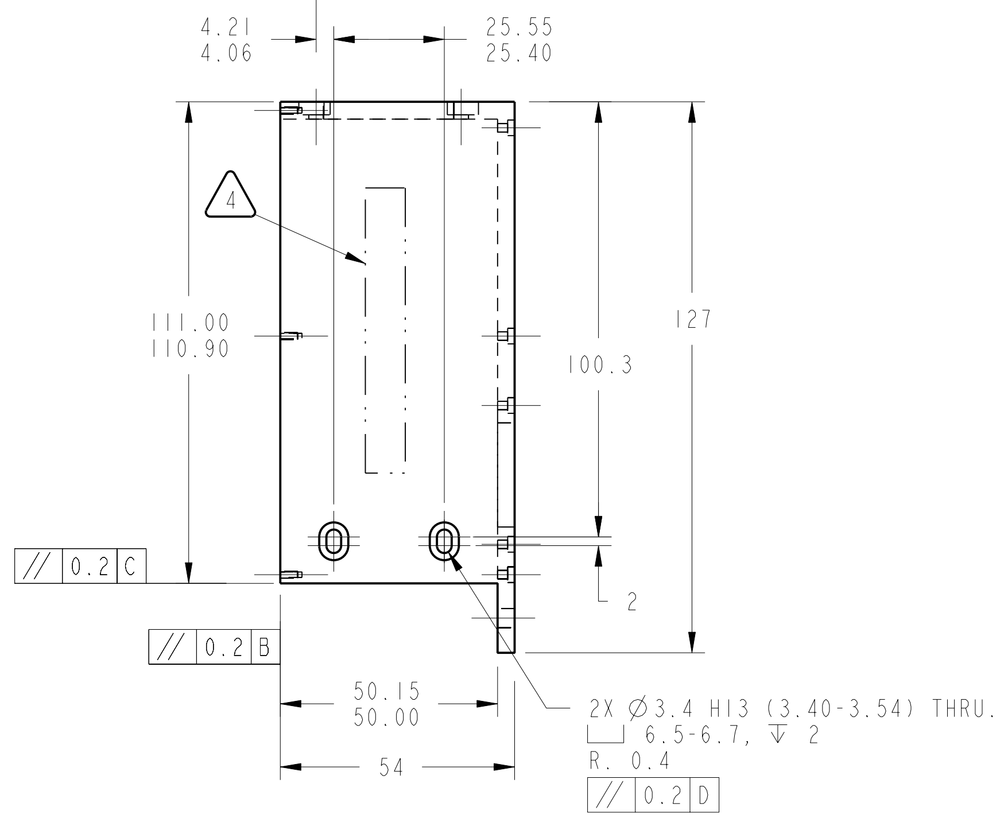

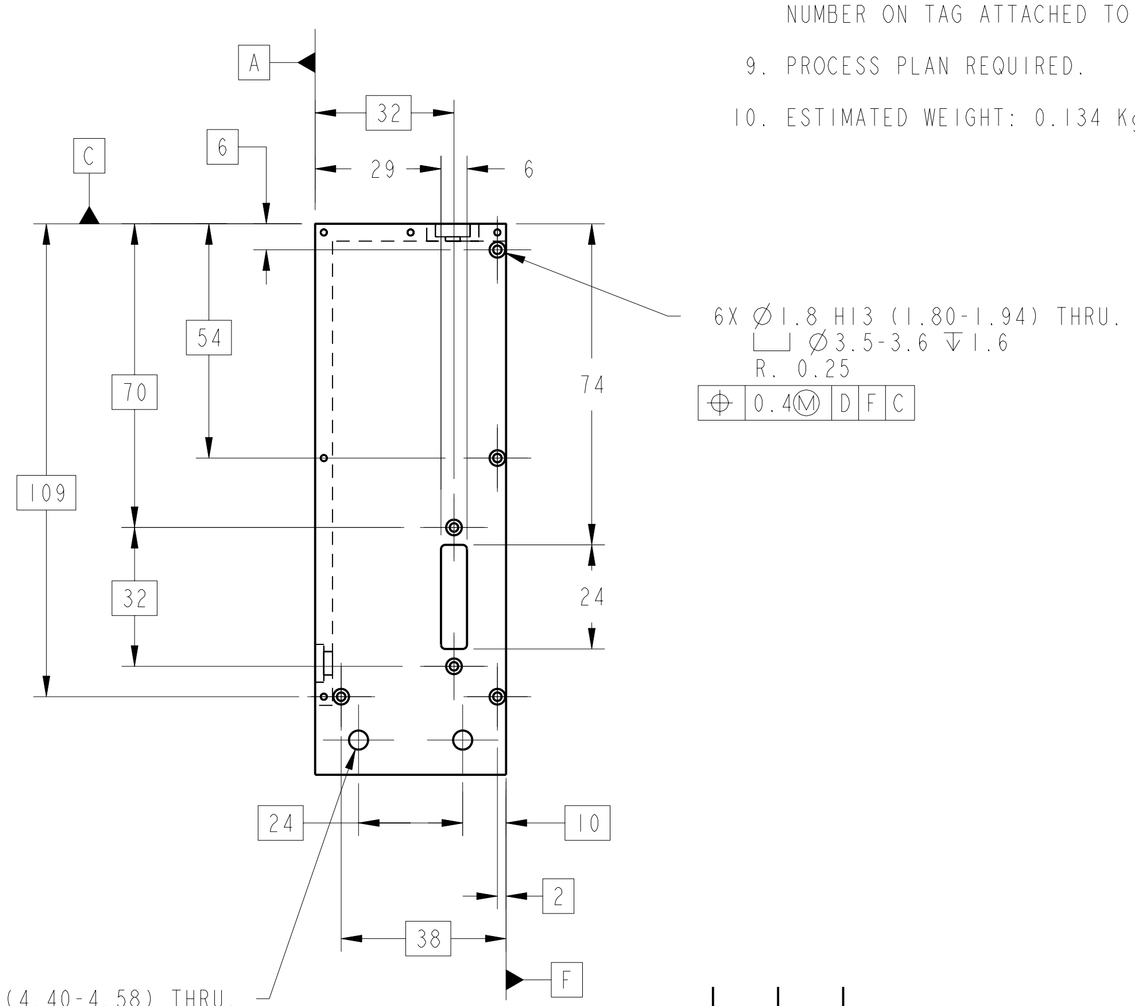

1. MATERIAL: 6061-T651 ALUMINUM PER SAE-AMS-QQ-A-250/11 OR ASTM B209
2. CERTIFICATION OF CHEMICAL AND MECHANICAL PROPERTIES IS REQUIRED.
3. 3.2 Ra ALL MACHINED SURFACES PER ANSI/ASME B46.1.
4. ALL INTERNAL RADII R1 UNLESS OTHERWISE NOTEED.
5. ELECTROCHEMICAL ETCH DRAWING PART NUMBER 67212MEDM143 ON SPECIFIED SURFACE PER SAE AS478 METHOD 7A (ZONE C5)
6. SURFACE TREATMENT: CLASS 3 CHEMICAL CONVERSION COATING PER MIL-C-5541: YELLOW/GOLD; USE IRIDITE 14-2 (ref. MACDERMID INC.); APPLY BY BRUSH OR IMMERSION AS APPLICABLE. BRUSH AND/OR SWAB TOUCH UP PER MIL-C-5541 SEC. 3.4; USE IRIDITE 14-2 BRUSH-ON KIT. THE USE OF IRIDITE 14-2 EQUIVALENT(S) IS PROHIBITED UNLESS SPECIFICALLY APPROVED BY ENGINEERING.
7. CLEAN SURFACES WITH 190 PROOF ETHYL ALCOHOL. WIPE WITH CLEAN COTTON SWABS AND/OR LINT-FREE CLOTH.
8. BEFORE STORAGE, PROTECT WITH CONTAMINATION BARRIER. USE CLEAN, NEW, TRANSPARENT, POLYETHYLENE BAG SEALED WITH FIBERGLASS PACKAGING TAPE. SEAL AND MARK WITH IDENTIFICATION NUMBER ON TAG ATTACHED TO BAG.
9. PROCESS PLAN REQUIRED.
10. ESTIMATED WEIGHT: 0.134 Kg.

CHG	ZONE	DESCRIPTION	APP/DATE

REVISIONS

UNLESS OTHERWISE SPECIFIED:
1. ALL DIMENSIONING AND TOLERANCING PER ASME Y14.5M-1994
2. ALL DIMENSIONS ARE IN MILLIMETERS
3. BREAK EDGES: 0.2-0.5
4. LINEAR TOLERANCES:
   0.5-6 ±0.1
   OVER 6-30 ±0.2
   OVER 30-120 ±0.3
   OVER 120-315 ±0.5
   OVER 315-1000 ±0.8
   OVER 1000-2000 ±1.2
5. ANGULAR TOLERANCES: 0° 30′

CONTRACT NAS3-99155
CONTRACTOR ANALEX CORP.
TASK ORDER -
DRAFTER LTHOMAS
ENGINEER D.CATALANO
DESIGNER LTHOMAS
THIRD ANGLE PROJECTION

NATIONAL AERONAUTICS AND SPACE ADMINISTRATION
JOHN H. GLENN RESEARCH CENTER
LEWIS FIELD
CLEVELAND, OHIO

MFC ENCLOSURE ASS'Y
67212MEDM142

M143 MFC ENCLOSURE - FRONT

PDM REL LEVEL: RELEASE PDM REVISION: x.2
PDM DATABASE: FCF
MODEL NAME: 67212MEDM143
PRIOR TO USE VERIFY THE INTENDED PURPOSE IN PDM ("FOR" ATTRIBUTE)

SIZE	DRAWING NUMBER	REV	BLDG	AREA
A1	67212MEDM143	-	110	117
			UNITS: mm	
SCALE: 1:1	INITIAL REL DATE 08/15/2000	SHEET 1 OF 1	DISCIPLINE MECH.	

PRO/E VERSION: 20.0

DRAWING NUMBER 67212MEDM143
SIZE A1
REV -

NAME:EDJEN OBJECT:67212MEDM143 DATE:30-Oct-00 11:05:29