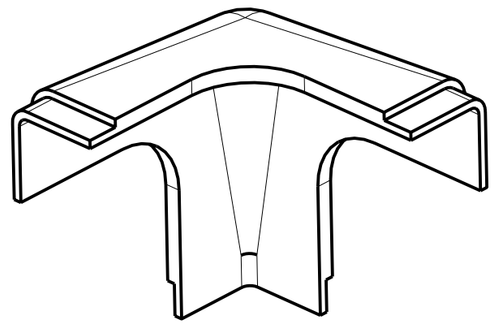

ISO VIEWS

TANGENT EDGE LINES SHOWN

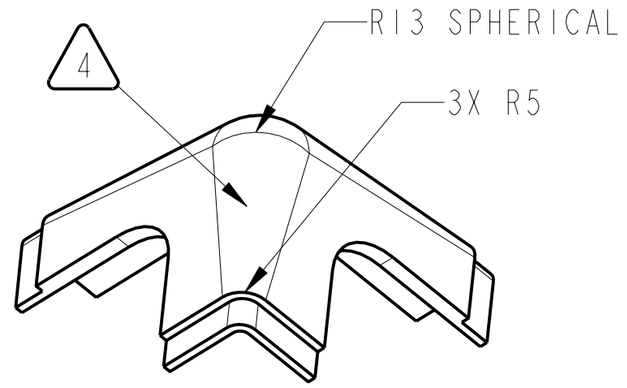

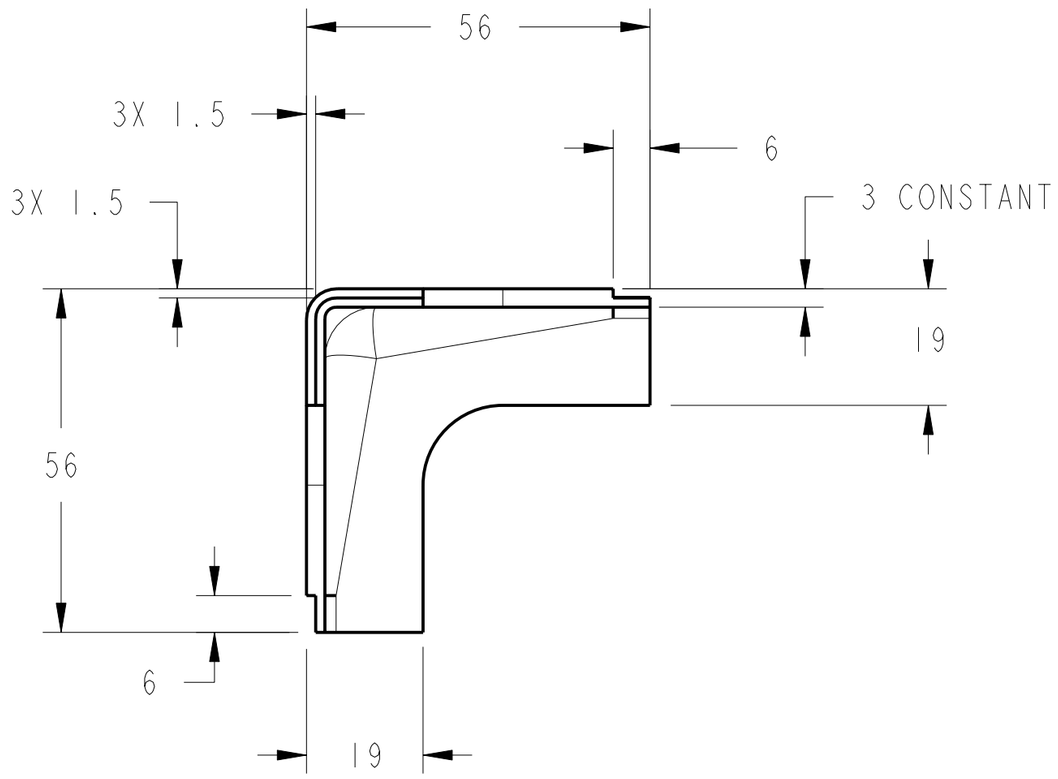

(TANGENT EDGE LINES SHOWN)

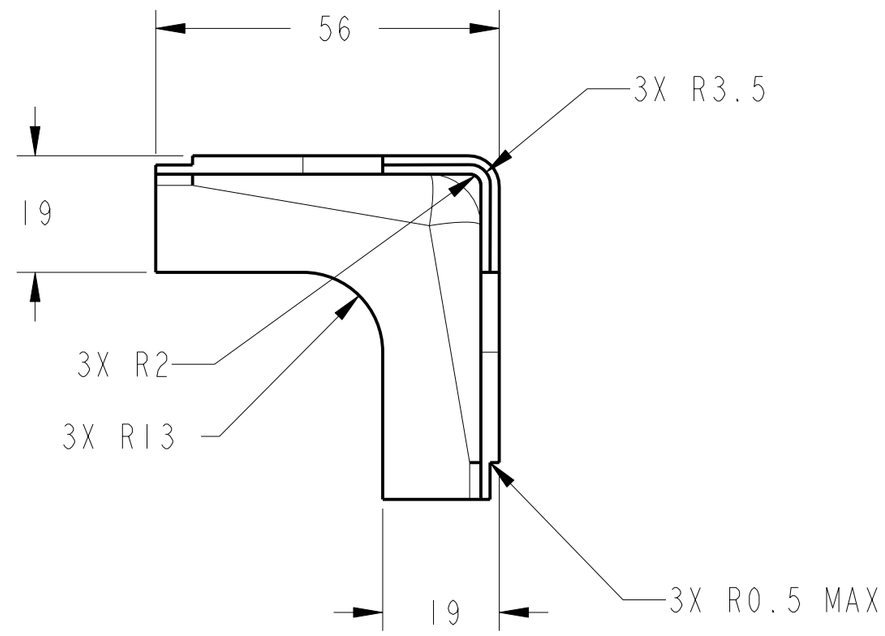

(TANGENT EDGE LINES SHOWN)

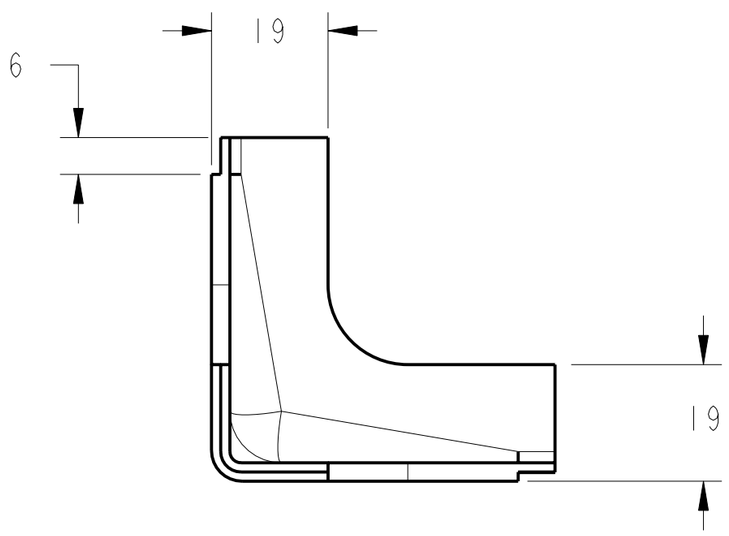

(TANGENT EDGE LINES SHOWN)

1. MATERIAL: 6061-T6 ALUMINUM PER FEDERAL SPEC QQ-A-250/11.
2. CERTIFICATE OF CONFORMANCE REQUIRED FOR MATERIAL.
3. 3.2 Ra ALL MACHINED SURFACES PER ANSI/ASME B46.1.
4. (4) BLEND INDICATED SURFACE BETWEEN 13 SHERICAL RADIUS AND 5 RADIUS. 3 PLACES, AS SHOWN.
5. IDENTIFY BY TAGGING WITH DRAWING PART NUMBER 67212MEDM132, PER SAE AS478, METHOD 35.
6. CLEAN SURFACES WITH 190 PROOF ETHYL ALCOHOL. WIPE WITH CLEAN COTTON SWABS AND/OR LINT-FREE CLOTH.
7. HANDLE WITH CLEAN, LINT FREE GLOVES.
8. PROTECT WITH CONTAMINATION BARRIER. USE CLEAN, NEW, TRANSPARENT, POLYETHYLENE BAG FOR SMALL ITEMS, OR 4 MIL THICK MINIMUM POLYETHYLENE SHEET SEALED WITH FIBERGLASS PACKAGING TAPE. SEAL AND MARK WITH IDENTIFICATION NUMBER ON TAG ATTACHED TO BAG.
9. PROCESS PLAN REQUIRED.
10. ESTIMATED WEIGHT=0.033 Kg.

CHG	ZONE	DESCRIPTION	APP/DATE

REVISIONS

UNLESS OTHERWISE SPECIFIED:
1. ALL DIMENSIONING AND TOLERANCING PER ASME Y14.5M-1994
2. ALL DIMENSIONS ARE IN MILLIMETERS
3. BREAK EDGES: 0.2-0.5
4. LINEAR TOLERANCES:
   0.5-6 ±0.1
   OVER 6-30 ±0.2
   OVER 30-120 ±0.3
   OVER 120-315 ±0.5
   OVER 315-1000 ±0.8
   OVER 1000-2000 ±1.2
5. ANGULAR TOLERANCES: 0° 30′

CONTRACT	NAS3-27600
CONTRACTOR	ADF, INC.
TASK ORDER	60
DRAFTER	ADF/W. HOLT
ENGINEER	ANLX/W. NARVAEZ
DESIGNER	ANLX/W. NARVAEZ

THIRD ANGLE PROJECTION

NATIONAL AERONAUTICS AND SPACE ADMINISTRATION
JOHN H. GLENN RESEARCH CENTER
LEWIS FIELD
CLEVELAND, OHIO

FRAME WELDMENT ASSEMBLY

67212MEDM130

(132) CORNER

PDM REL LEVEL: **RELEASE** PDM REVISION: **x.7**

PDM DATABASE: **FCF**

MODEL NAME: **67212MEDM132**

PRIOR TO USE VERIFY THE INTENDED PURPOSE IN PDM ("FOR" ATTRIBUTE)

SIZE	DRAWING NUMBER	REV	BLDG	AREA
A2	67212MEDM132	-	333	-

UNITS: mm

SCALE:	INITIAL REL DATE	SHEET	DISCIPLINE
1:1	XX/XX/XXXX	1 OF 1	MECHANICAL

PRO/E VERSION: 20.0

DRAWING NUMBER 67212MEDM132 SIZE A2 REV -

NAME:EDJEN OBJECT:67212MEDM132 DATE:30-Oct-00 11:03:29