DRAWING LIST

BALLOON NO	DRAWING NUMBER	DESCRIPTION	QTY/ ASSY
M130	67212MEDM130	FRAME WELDMENT ASSEMBLY	1
M131	67212MEDM131	HORIZONTAL SIDE ANGLE	4
M132	67212MEDM132	CORNER	4
M133	67212MEDM133	FRONT HORIZONTAL ANGLE	2
M134	67212MEDM134	FRONT VERTICAL ANGLE	2

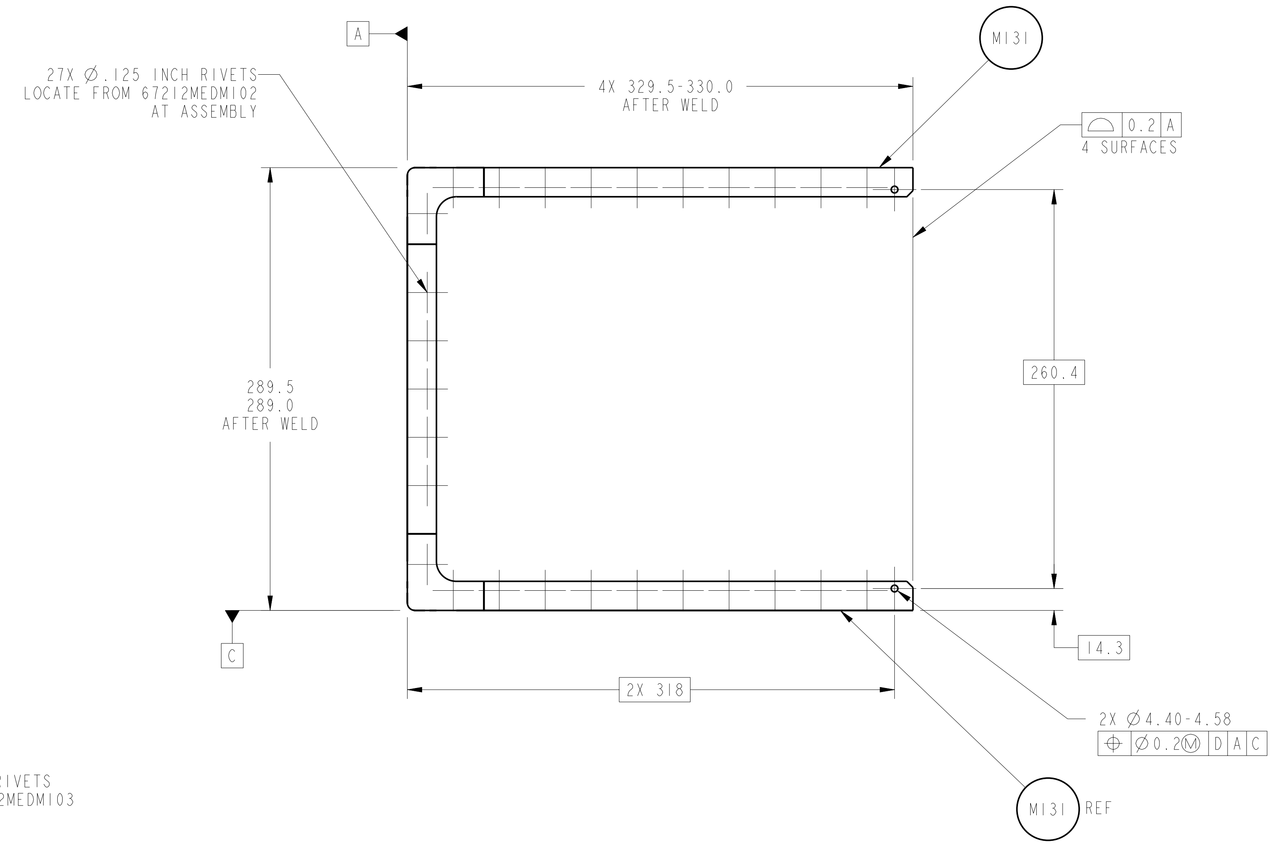

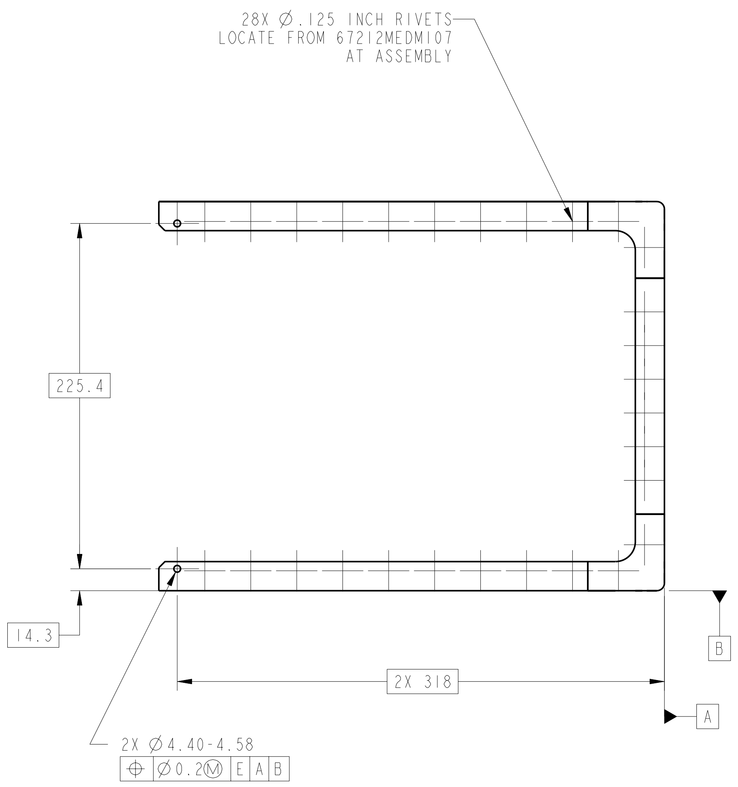

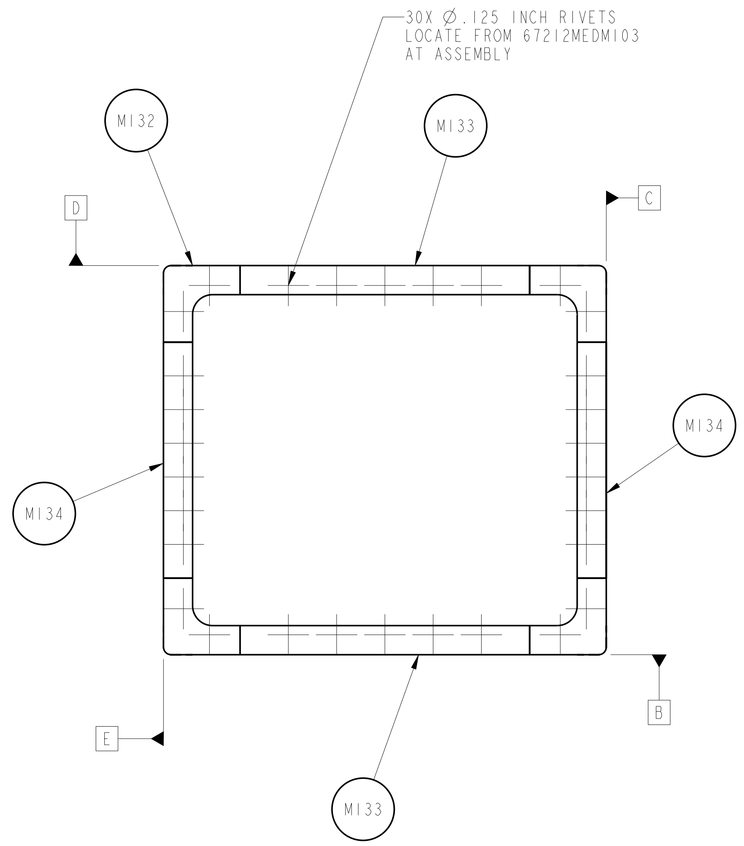

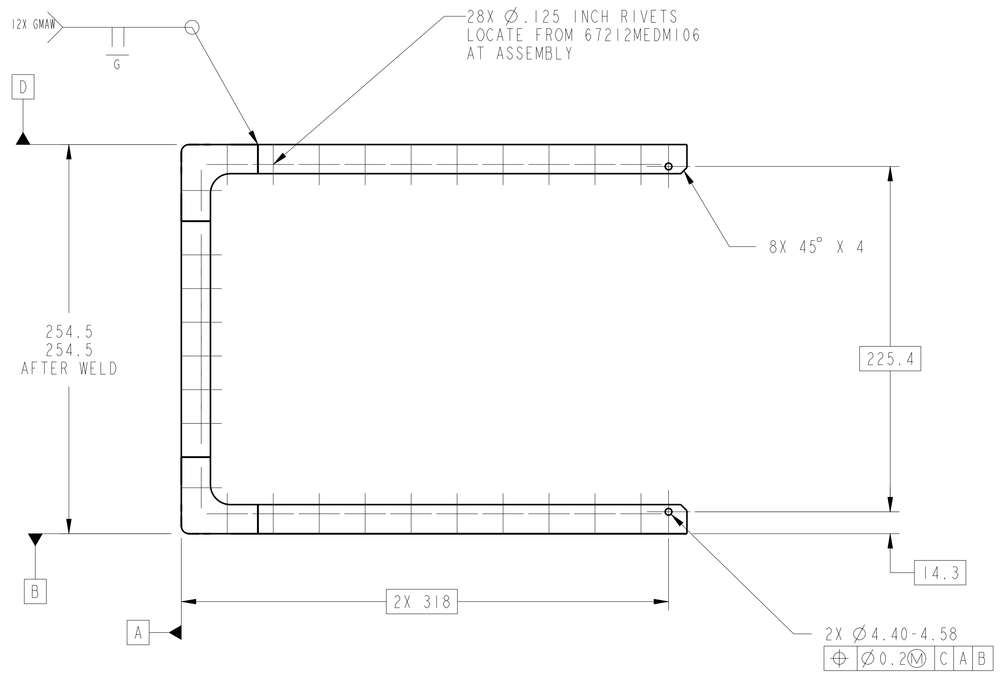

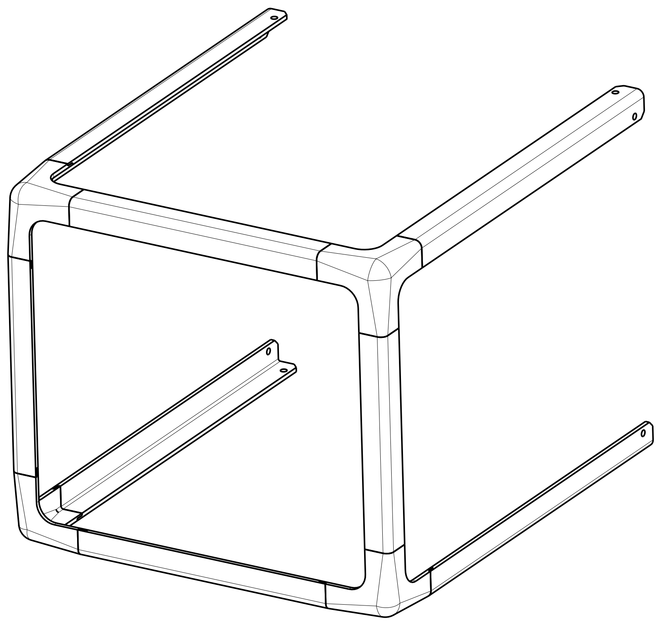

ISO VIEW

TANGENT EDGE LINES SHOWN

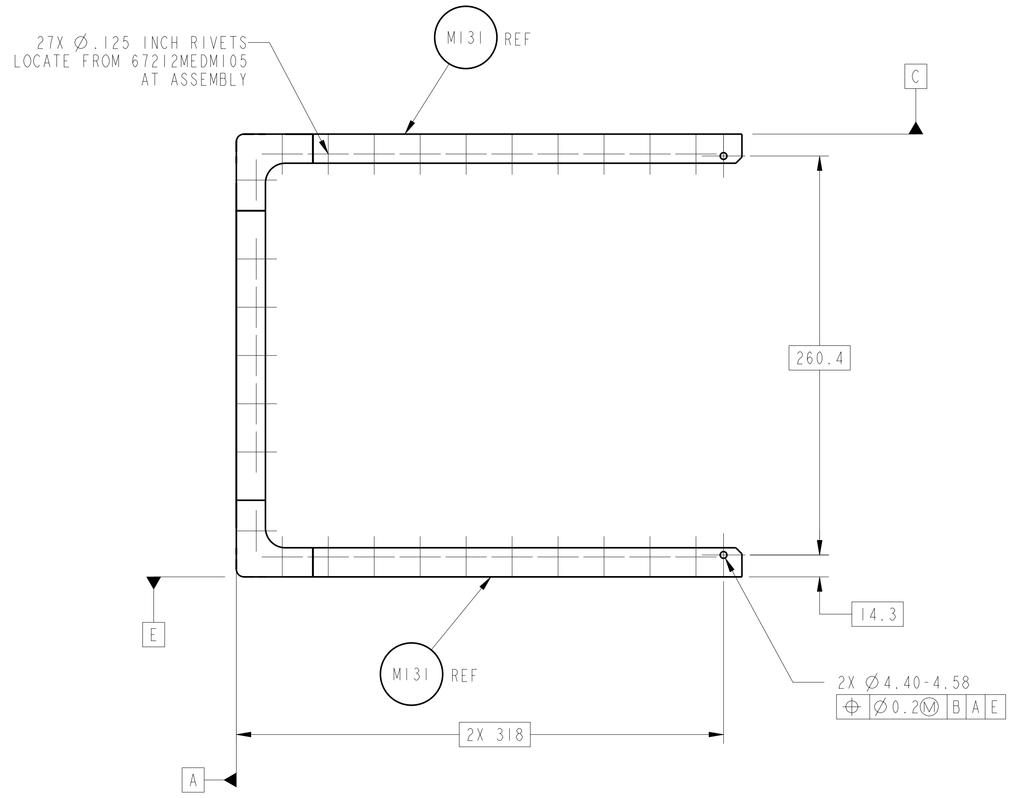

1. ALUMINUM WELDING TO MEET MIL-W-22248A, CLASS 3.
2. THERMAL STRESS RELIEVE AFTER WELDING AND BEFORE FINISH MACHINING BY SOLUTION TREATING AT 960-980°F FOR ONE HOUR AND THEN WATER QUENCH. FOLLOW WITH AGING AT 320-360°F FOR 16 HOURS.
3. 3.2 Ra ALL MACHINED SURFACES PER ANSI/ASME B46.1.
4. PART TO BE ELECTROLESS NICKEL COATED AT ASSEMBLY (SEE 67212MELM100). FINISH DIMENSIONS SHOWN APPLY AFTER COATING.
5. IDENTIFY BY TAGGING WITH DRAWING PART NUMBER 67212MEDM130, PER SAE AS478, METHOD 35.
6. CLEAN SURFACES WITH 190 PROOF ETHYL ALCOHOL. WIPE WITH CLEAN COTTON SWABS AND/OR LINT-FREE CLOTH.
7. HANDLE WITH CLEAN, LINT FREE GLOVES.
8. PROTECT WITH CONTAMINATION BARRIER. USE CLEAN, NEW, TRANSPARENT, POLYETHYLENE BAG FOR SMALL ITEMS, OR 4 MIL THICK MINIMUM POLYETHYLENE SHEET SEALED WITH FIBERGLASS PACKAGING TAPE. SEAL AND MARK WITH IDENTIFICATION NUMBER ON TAG ATTACHED TO BAG.
9. PROCESS PLAN REQUIRED.
10. ESTIMATED WEIGHT=0.606 Kg.

CHG	ZONE	DESCRIPTION	APP/DATE

REVISIONS

UNLESS OTHERWISE SPECIFIED:
1. ALL DIMENSIONING AND TOLERANCING PER ASME Y14.5M-1994
2. ALL DIMENSIONS ARE IN MILLIMETERS
3. BREAK EDGES: 0.2-0.5
4. LINEAR TOLERANCES:
   0.5-6 ±0.1
   OVER 6-30 ±0.2
   OVER 30- 120 ±0.3
   OVER 120-315 ±0.5
   OVER 315-1000 ±0.8
   OVER 1000-2000 ±1.2
5. ANGULAR TOLERANCES: 0° 30'

CONTRACT	NAS3-27600
CONTRACTOR	ADF, INC.
TASK ORDER	60
DRAFTER	ADF/ W. HOLT
ENGINEER	ANLX/ W. NARVAEZ
DESIGNER	ANLX/ W. NARVAEZ

THIRD ANGLE PROJECTION

NATIONAL AERONAUTICS AND SPACE ADMINISTRATION
JOHN H. GLENN RESEARCH CENTER
LEWIS FIELD
CLEVELAND, OHIO

FOMA CONTROL UNIT ASSEMBLY

67212MELM100

130 FRAME WELDMENT ASSEMBLY

PDM REL LEVEL: RELEASE PDM REVISION: x.7
PDM DATABASE: FCF
MODEL NAME: 67212MEDM130
PRIOR TO USE VERIFY THE INTENDED PURPOSE IN PDM ("FOR" ATTRIBUTE)

SIZE	DRAWING NUMBER	REV	BLDG	AREA
A0	67212MEDM130	A	333	-
			UNITS: mm	
SCALE: 1:2	INITIAL REL. DATE XX/XX/XXXX	SHEET 1 OF 1	DISCIPLINE MECHANICAL	

PRO/E VERSION: 20.0

TYPE A0 DRAWING NUMBER 67212MEDM130 REV A

NAME:FDGER OBJECT:67212MEDM130 DATE:30-Oct-00 11:02:20