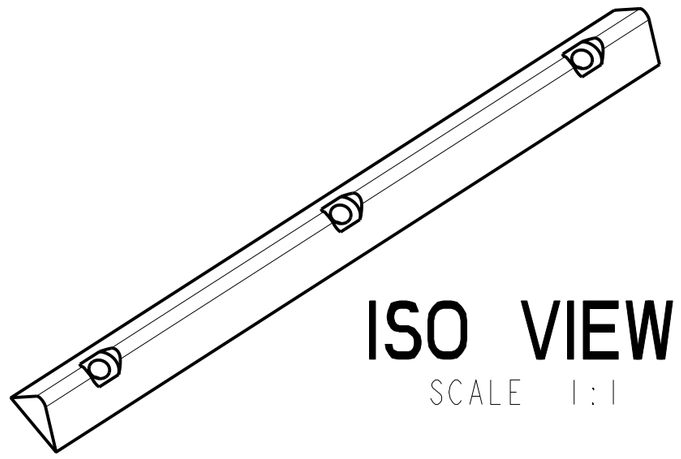

ISO VIEW
SCALE 1:1

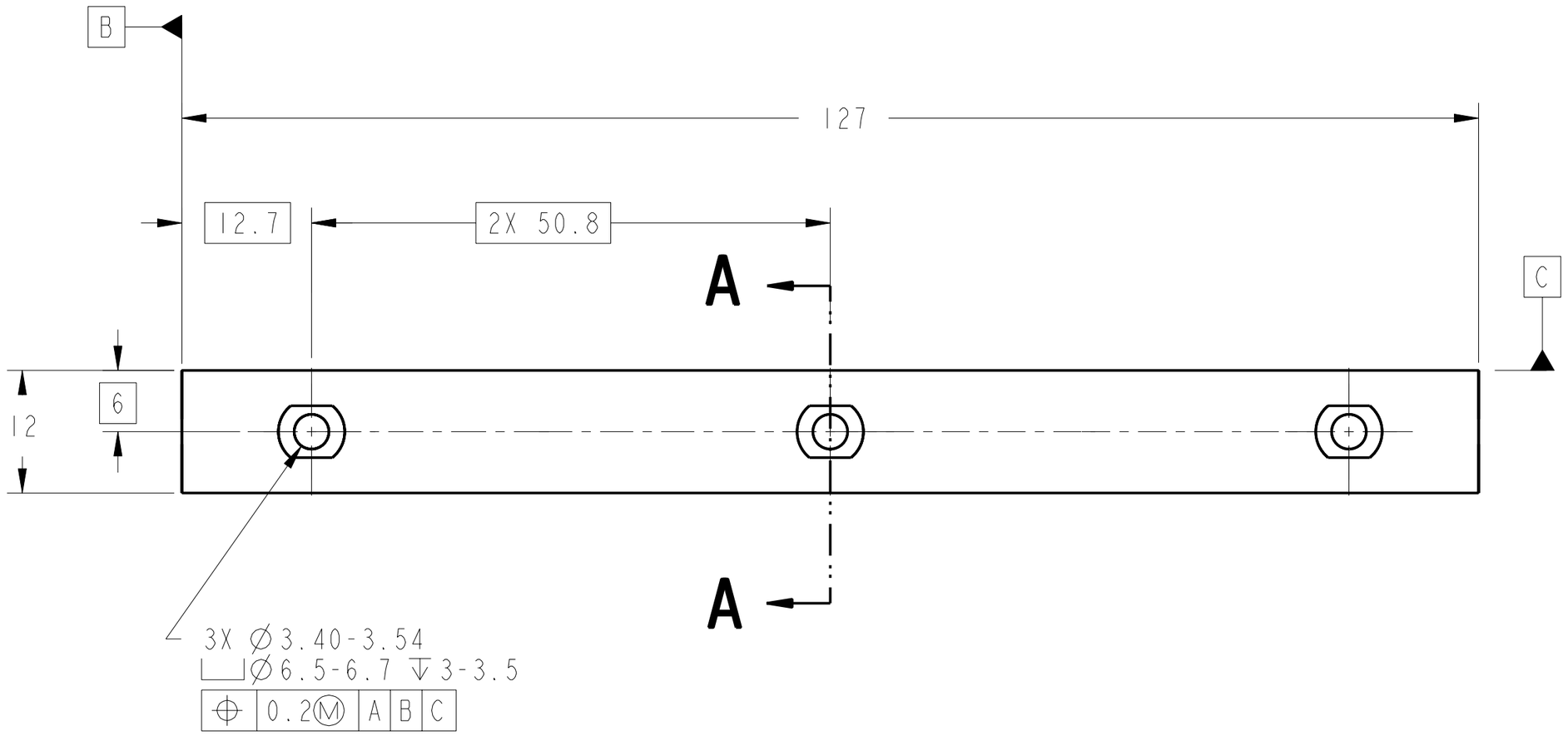

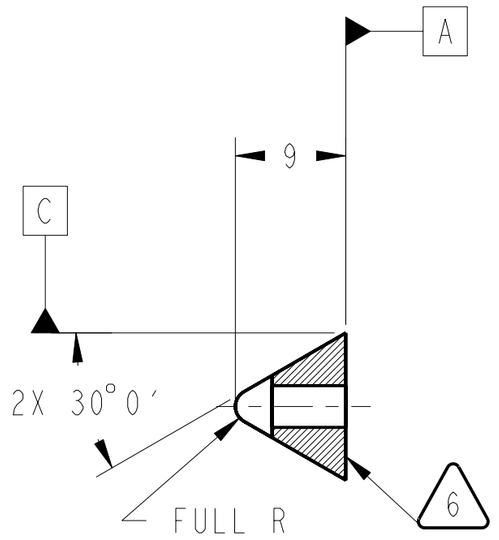

SECTION A-A

1. MATERIAL: 6061-T6 ALUMINUM PER FEDERAL SPEC QQ-A-250/11.
2. CERTIFICATE OF CONFORMANCE REQUIRED FOR MATERIAL.
3. 3.2 Ra ALL OVER PER ANSI/ASME B46.1.
4. FLUORESCENT PENETRANT INSPECT PER MIL-STD-6866 TYPE 1, METHOD A OR B, WATER WASHABLE. ACCEPTANCE PER MIL-STD-1907, TABLE 1, GRADE A.
5. SURFACE TREATMENT PER MIL-C-5541, CLASS 3. USE IRIDITE 14.2 OR REQUESTER APPROVED EQUAL PER MIL-C-81706, CLASS 3, FORM 11, METHOD B OR C AS APPLICABLE. SPOT TOUCH UP BY METHOD B.
6. ELECTROCHEMICAL ETCH DRAWING PART NUMBER 67212MEDM128 ON SPECIFIED SURFACE PER SAE AS478, METHOD 7A (ZONE C2).
7. CLEAN SURFACES WITH 190 PROOF ETHYL ALCOHOL. WIPE WITH CLEAN COTTON SWABS AND/OR LINT-FREE CLOTH.
8. HANDLE WITH CLEAN, LINT FREE GLOVES.
9. PROCESS PLAN REQUIRED.
10. ESTMATED WEIGHT= 0.020 Kg.

CHG	ZONE	DESCRIPTION	APP/DATE

REVISIONS

UNLESS OTHERWISE SPECIFIED:
1. ALL DIMENSIONING AND TOLERANCING PER ASME Y14.5M-1994
2. ALL DIMENSIONS ARE IN MILLIMETERS
3. BREAK EDGES: 0.2-0.5
4. LINEAR TOLERANCES:
   - 0.5-6 ±0.1
   - OVER 6-30 ±0.2
   - OVER 30-120 ±0.3
   - OVER 120-315 ±0.5
   - OVER 315-1000 ±0.8
   - OVER 1000-2000 ±1.2
5. ANGULAR TOLERANCES: 0° 30′

CONTRACT	NAS3-27600
CONTRACTOR	ADF, INC.
TASK ORDER	60
DRAFTER	ADF/ M. AYNIK
ENGINEER	ANLX/ W. NARVAEZ
DESIGNER	ANLX/ W. NARVAEZ

THIRD ANGLE PROJECTION

NATIONAL AERONAUTICS AND SPACE ADMINISTRATION
JOHN H. GLENN RESEARCH CENTER
LEWIS FIELD
CLEVELAND, OHIO

FCU CARD CAGE ASSEMBLY

67212MELM120

128 AIR DIVIDER

PDM REL LEVEL: **RELEASE** PDM REVISION: **x.4**
PDM DATABASE: **FCF**
MODEL NAME: **67212MEDM128**
PRIOR TO USE VERIFY THE INTENDED PURPOSE IN PDM ("FOR" ATTRIBUTE)

SIZE	DRAWING NUMBER	REV	BLDG	AREA
A2	67212MEDM128	-	333	-

UNITS: mm

SCALE:	INITIAL REL DATE	SHEET	DISCIPLINE
2:1	XX/XX/XXXX	1 OF 1	MECHANICAL

PRO/E VERSION: 20.0

SIZE A2 DRAWING NUMBER 67212MEDM128 REV -

NAME:EDJEN OBJECT:67212MEDM128 DATE:30-Oct-00 11:01:41