COMMERCIAL PARTS LIST

PART TYPE	BALLOON NO	DESCRIPTION	QTY/ ASSY
C	1	INSERT, KEENSERT, PART NUMBER KNCML 3X0.5 (FOR M3X0.5 FASTENER)	11

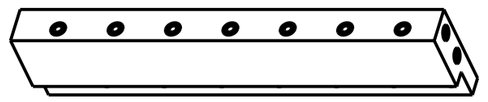

ISO VIEW

SCALE 1:2

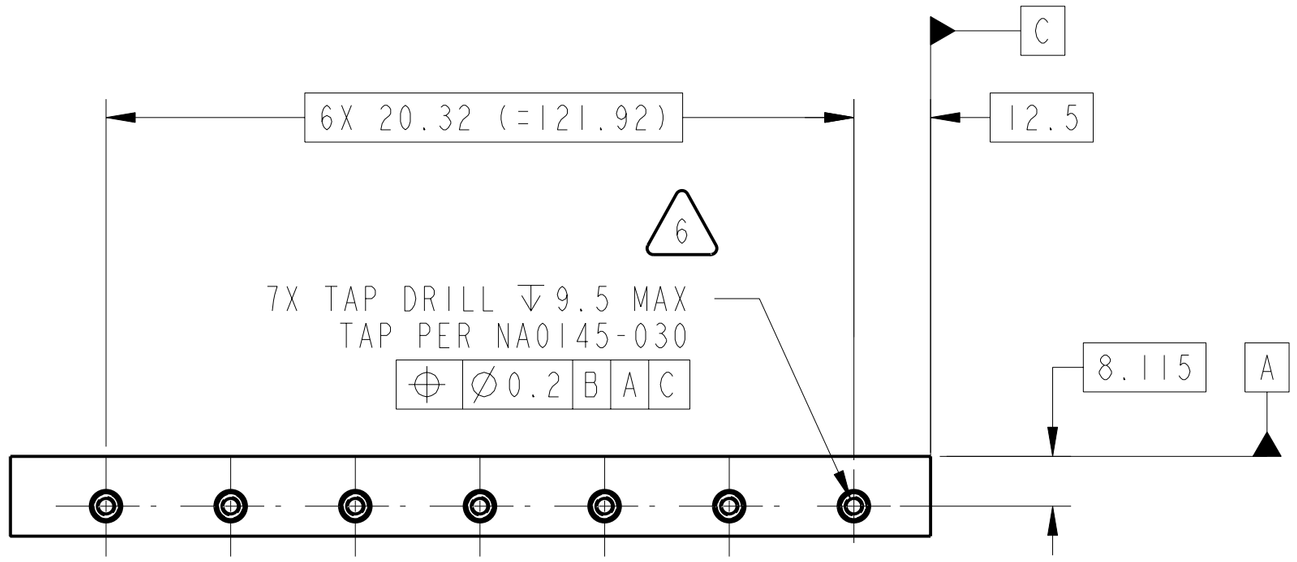

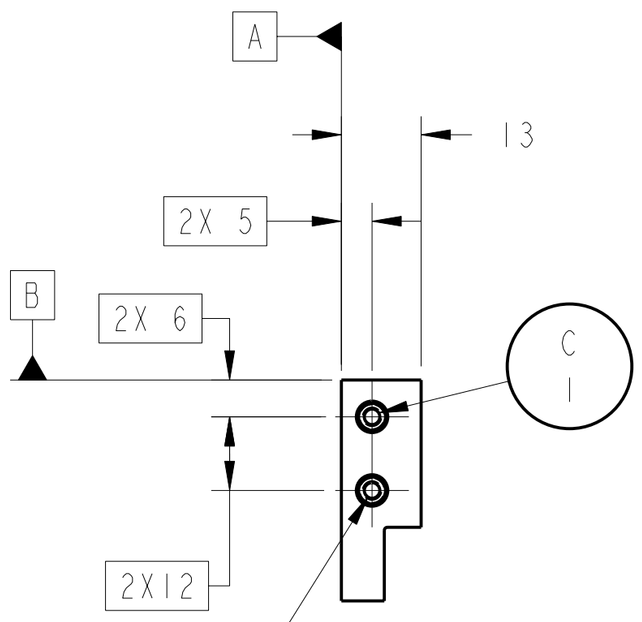

6

2X TAP DRILL
TAP PER NA0145-030
NEAR SIDE AND FAR SIDE
4 HOLES TOTAL
⌖ ∅0.2 C A B

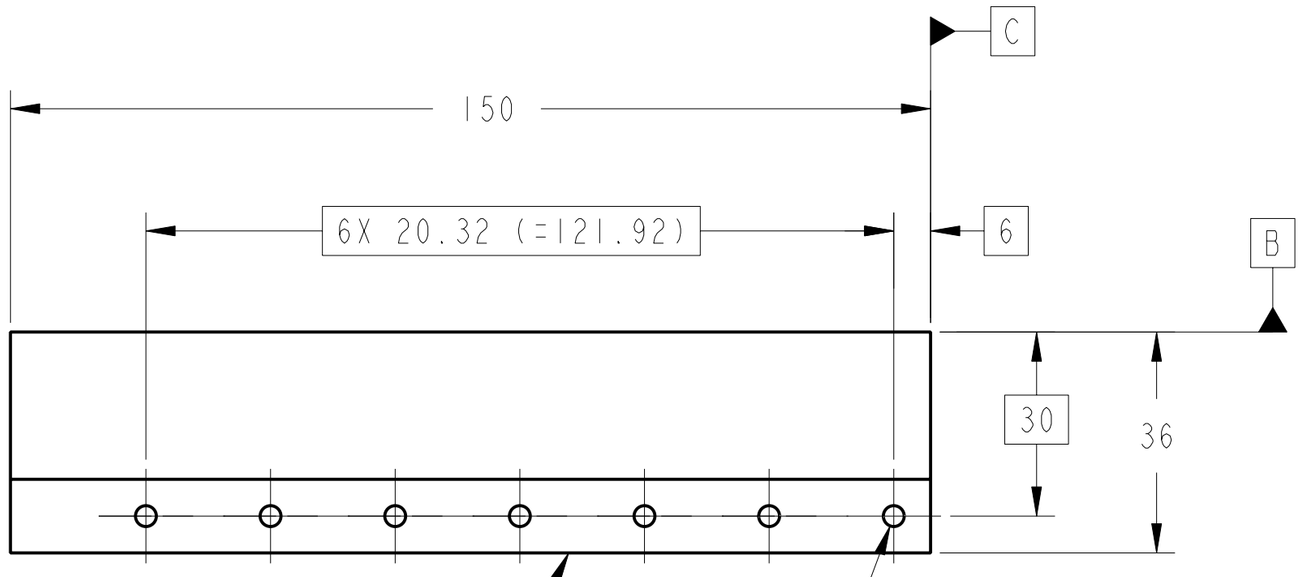

5

7X ∅3.40-3.54 THRU
⌖ ∅0.2 Ⓜ A B C

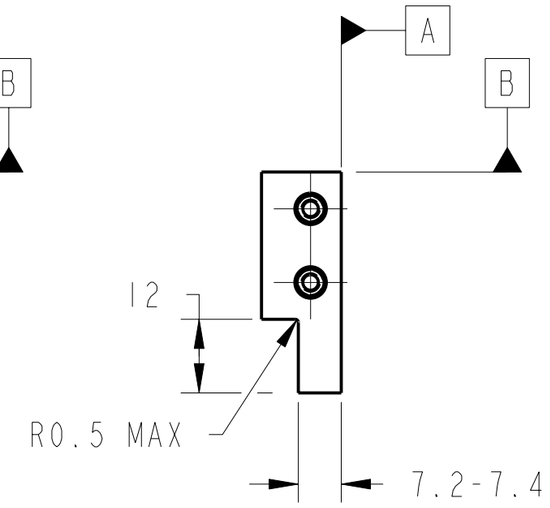

1. MATERIAL: 6061-T6 ALUMINUM PER FEDERAL SPEC QQ-A-250/11 AND AS NOTED.
2. CERTIFICATE OF CONFORMANCE REQUIRED FOR ALL MATERIALS.
3. 3.2 Ra ALL OVER PER ANSI/ASME B46.1.
4. SURFACE TREATMENT PER MIL-C-5541, CLASS 3. USE IRIDITE 14.2 OR REQUESTER APPROVED EQUAL PER MIL-C-81706, CLASS 3, FORM 11, METHOD B OR C AS APPLICABLE, PRIOR TO INSTALLATION OF THREADED INSERTS PER NOTE 6. SPOT TOUCH UP BY METHOD B.
5. ELECTROCHEMICAL ETCH DRAWING PART NUMBER 67212MEDM123 ON SPECIFIED SURFACE PER SAE AS478, METHOD 7A (ZONE D5).
6. INSTALL THREADED INSERTS PER MANUFACTURER'S SPECIFICATIONS AFTER SURFACE TREATMENT PER NOTE 4.
7. CLEAN SURFACES WITH 190 PROOF ETHYL ALCOHOL. WIPE WITH CLEAN COTTON SWABS AND/OR LINT-FREE CLOTH.
8. HANDLE WITH CLEAN, LINT FREE GLOVES.
9. PROTECT WITH CONTAMINATION BARRIER. USE CLEAN, NEW, TRANSPARENT, POLYETHYLENE BAG FOR SMALL ITEMS, OR 4 MIL THICK MINIMUM POLYETHYLENE SHEET SEALED WITH FIBERGLASS PACKAGING TAPE. SEAL AND MARK WITH IDENTIFICATION NUMBER ON TAG ATTACHED TO BAG.
10. PROCESS PLAN REQUIRED.
11. ESTIMATED WEIGHT=0.162 Kg.

CHG	ZONE	DESCRIPTION	APP/DATE

REVISIONS

UNLESS OTHERWISE SPECIFIED:

1. ALL DIMENSIONING AND TOLERANCING PER ASME Y14.5M-1994
2. ALL DIMENSIONS ARE IN MILLIMETERS
3. BREAK EDGES: 0.2-0.5
4. LINEAR TOLERANCES:
   - 0.5-6 ±0.1
   - OVER 6-30 ±0.2
   - OVER 30- 120 ±0.3
   - OVER 120-315 ±0.5
   - OVER 315-1000 ±0.8
   - OVER 1000-2000 ±1.2
5. ANGULAR TOLERANCES: 0° 30′

CONTRACT	NAS3-27600
CONTRACTOR	ADF, INC.
TASK ORDER	60
DRAFTER	ADF/ M. AYNIK
ENGINEER	ANLX/ W. NARVAEZ
DESIGNER	ANLX/ W. NARVAEZ

THIRD ANGLE PROJECTION

NATIONAL AERONAUTICS AND SPACE ADMINISTRATION
JOHN H. GLENN RESEARCH CENTER
LEWIS FIELD
CLEVELAND, OHIO

FCU CARD CAGE ASSEMBLY

67212MELM120

123 TOP BAR, REAR

PDM REL LEVEL: **WORKING** PDM REVISION: **x.6**

PDM DATABASE: **FCF**

MODEL NAME: **67212MEDM123**

PRIOR TO USE VERIFY THE INTENDED PURPOSE IN PDM ("FOR" ATTRIBUTE)

SIZE	DRAWING NUMBER	REV	BLDG	AREA
A2	67212MEDM123	-	333	-
			UNITS: mm	
SCALE: 1:1 AND NOTED	INITIAL REL DATE XX/XX/XXXX	SHEET 1 OF 1	DISCIPLINE MECHANICAL	

DRAWING NUMBER 67212MEDM123 SIZE A2 REV -

PRO/E VERSION: 20.0

NAME:EDJEN OBJECT:67212MEDM123 DATE:30-Oct-00 10:59:20