COMMERCIAL PARTS LIST

PART TYPE	BALLOON NO	DESCRIPTION	QTY/ ASSY
C	1	INSERT, KEENSERT PART NUMBER KNCML 4X0.7 (FOR M4 X 0.7 SHCS)	4

5

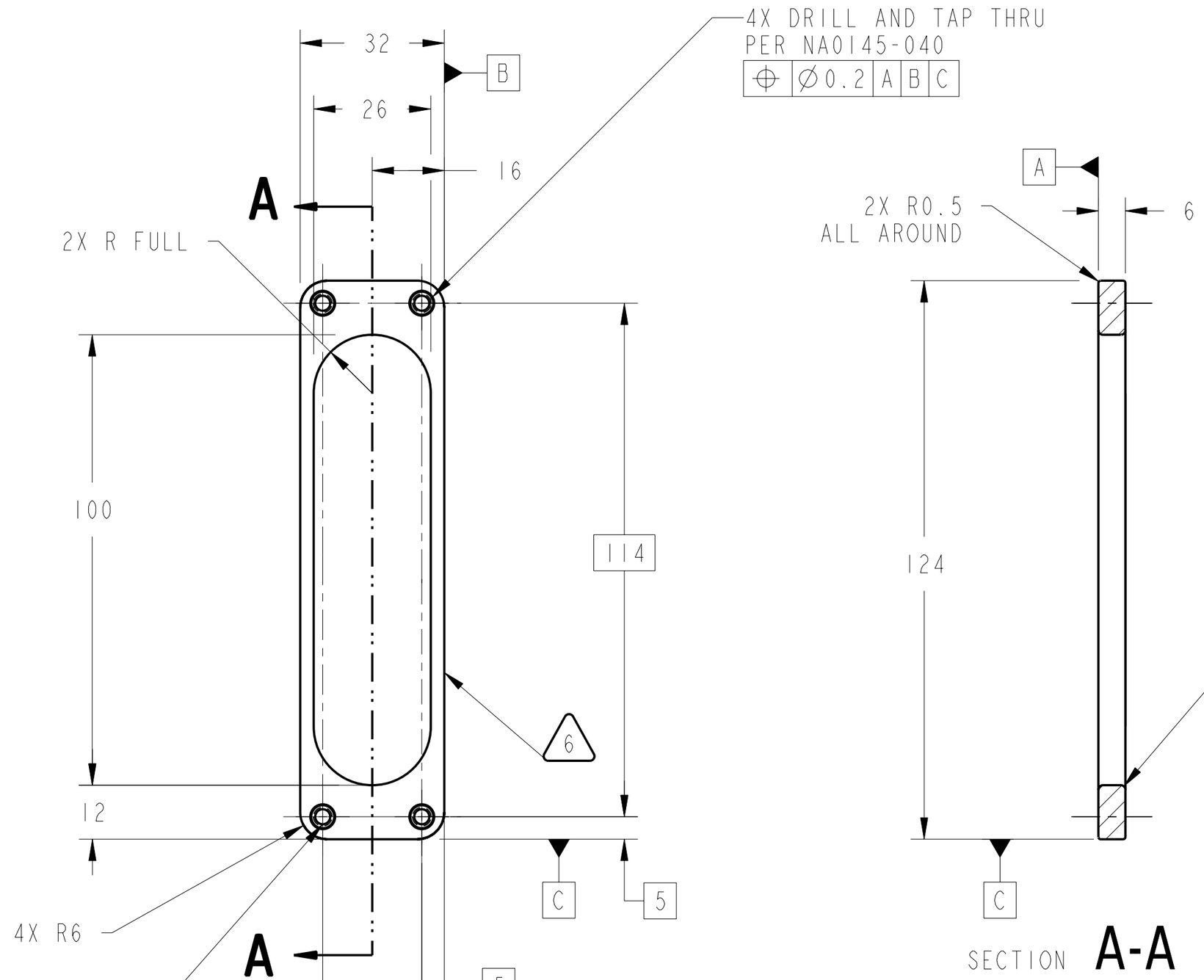

9. PROTECT WITH CONTAMINATION BARRIER. USE CLEAN, NEW, TRANSPARENT, POLYETHYLENE BAG FOR SMALL ITEMS, OR 4 MIL THICK MINIMUM POLYETHYLENE SHEET SEALED WITH FIBERGLASS PACKAGING TAPE. SEAL AND MARK WITH IDENTIFICATION NUMBER ON TAG ATTACHED TO BAG.

10. PROCESS PLAN REQUIRED.

11. ESTIMATED WEIGHT=0.023 Kg.

1. MATERIAL: 6061-T651 ALUMINUM PER FEDERAL SPEC QQ-A-250/11 AND AS NOTED.

2. CERTIFICATE OF CONFORMANCE REQUIRED FOR ALL MATERIALS.

3. 3.2 Ra ALL OVER PER ANSI/ASME B46.1.

4. SURFACE TREATMENT PER MIL-C-5541, CLASS 3. USE IRIDITE 14.2 OR REQUESTER APPROVED EQUAL PER MIL-C-81706, CLASS 3, FORM II, METHOD B OR C AS APPLICABLE PRIOR TO INSTALLATION OF THREADED INSERTS. SPOT TOUCH UP BY METHOD B.

5. INSTALL THREADED INSERTS PER MANUFACTURER'S SPECIFICATIONS AFTER SURFACE TREATMENT PER NOTE 4.

6. ELECTROCHEMICAL ETCH DRAWING PART NUMBER 67212MEDM113 ON SPECIFIED SURFACE PER SAE AS478, METHOD 7A (ZONE B5).

7. CLEAN SURFACES WITH 190 PROOF ETHYL ALCOHOL. WIPE WITH CLEAN COTTON SWABS AND/OR LINT-FREE CLOTH.

8. HANDLE WITH CLEAN, LINT FREE GLOVES.

CHG	ZONE	DESCRIPTION	APP/DATE

REVISIONS

UNLESS OTHERWISE SPECIFIED:

1. ALL DIMENSIONING AND TOLERANCING PER ASME Y14.5M-1994
2. ALL DIMENSIONS ARE IN MILLIMETERS
3. BREAK EDGES: 0.2-0.5
4. LINEAR TOLERANCES:
   - 0.5-6 ±0.1
   - OVER 6-30 ±0.2
   - OVER 30- 120 ±0.3
   - OVER 120-315 ±0.5
   - OVER 315-1000 ±0.8
   - OVER 1000-2000 ±1.2
5. ANGULAR TOLERANCES: 0° 30′

CONTRACT	NAS3-27600
CONTRACTOR	ADF, INC.
TASK ORDER	60
DRAFTER	ADF/D.ROBINSON
ENGINEER	ANLX/W.NARVAEZ
DESIGNER	ADF/D.ROBINSON

THIRD ANGLE PROJECTION

NATIONAL AERONAUTICS AND SPACE ADMINISTRATION
JOHN H. GLENN RESEARCH CENTER
LEWIS FIELD
CLEVELAND, OHIO

FOMA CONTROL UNIT ASSEMBLY

67212MELM100

113 SCREEN RETAINING FRAME

PDM REL LEVEL: **RELEASE** PDM REVISION: **x.5**

PDM DATABASE: **FCF**

MODEL NAME: **67212MEDM113**

PRIOR TO USE VERIFY THE INTENDED PURPOSE IN PDM ("FOR" ATTRIBUTE)

SIZE	DRAWING NUMBER	REV	BLDG	AREA
A2	67212MEDM113	-	333	-

UNITS: mm

SCALE:	INITIAL REL DATE	SHEET	DISCIPLINE
1:1	XX/XX/XXXX	1 OF 1	MECHANICAL

PRO/E VERSION: 20.0

SIZE A2 DRAWING NUMBER 67212MEDM113 REV -

NAME:EDJEN OBJECT:67212MEDM113 DATE:30-Oct-00 10:57:58