COMMERCIAL PARTS LIST

PART TYPE	BALLOON NO	DESCRIPTION	QTY/ ASSY	
C	1	INSERT, KEENSERT PART NUMBER KNCM 4X0.7 (FOR M4 X 0.7 FASTENER WITH LOCKING KEES REMOVED)	26	7
C	2	INSERT, KEENSERT PART NUMBER KNCML 4X0.7 (FOR M4 X 0.7 FASTENER)	24	6
C	3	INSERT, KEENSERT PART NUMBER KNCAL0440J (FOR .112-40 INCH FASTENER)(MS51830-102)	10	8
C	4	INSERT, KEENSERT PART NUMBER KN420J (FOR.250-20 INCH FASTENER) (MS51830-106)	2	8

1. MATERIAL: 6061-T651 ALUMINUM PER FEDERAL SPEC QQ-A-250/11 AND AS NOTED.
2. CERTIFICATE OF CONFORMANCE REQUIRED FOR ALL MATERIALS.
3. 3.2 Ra ALL OVER PER ANSI/ASME B46.1.
4. ALL INTERNAL RADII TO BE .25 MAX UNLESS OTHERWISE SPECIFIED.
5. ELECTROLESS NICKEL COATING, CLASS 2, GRADE B, .00015 TO .00013 INCH THICK PER MIL-C-26074 OR EQUIVALENT. APPLY PRIOR TO INSTALLING THREADED INSERTS. FINISH DIMENSIONS APPLY AFTER COATING.
6. IDENTIFY BY TAGGING WITH DRAWING PART NUMBER 67212MEDM101, PER SAE AS478, METHOD 35.
7. INSTALL THREADED INSERTS PER MANUFACTURER'S SPECIFICATIONS AFTER SURFACE TREATMENT PER NOTE 5.
8. CLEAN SURFACES WITH 190 PROOF ETHYL ALCOHOL. WIPE WITH CLEAN COTTON SWABS AND/OR LINT-FREE CLOTH.
9. HANDLE WITH CLEAN, LINT FREE GLOVES.
10. PROTECT WITH CONTAMINATION BARRIER. USE CLEAN, NEW, TRANSPARENT, POLYETHYLENE BAG FOR SMALL ITEMS, OR 4 MIL THICK MINIMUM POLYETHYLENE SHEET SEALED WITH FIBERGLASS PACKAGING TAPE. SEAL AND MARK WITH IDENTIFICATION NUMBER ON TAG ATTACHED TO BAG.
11. PROCESS PLAN REQUIRED.
12. ESTIMATED WEIGHT=0.987 Kg.

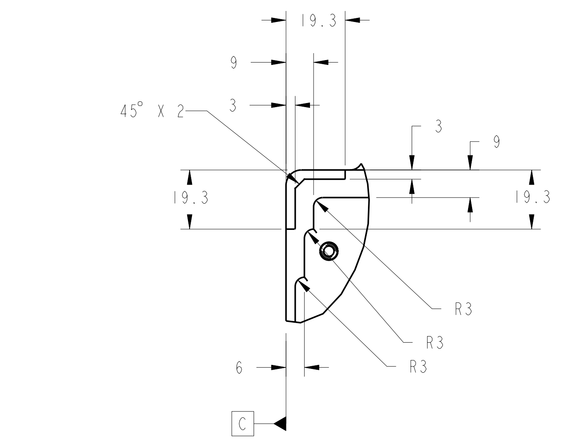

DETAIL E
SCALE 1:1
2 PLACES

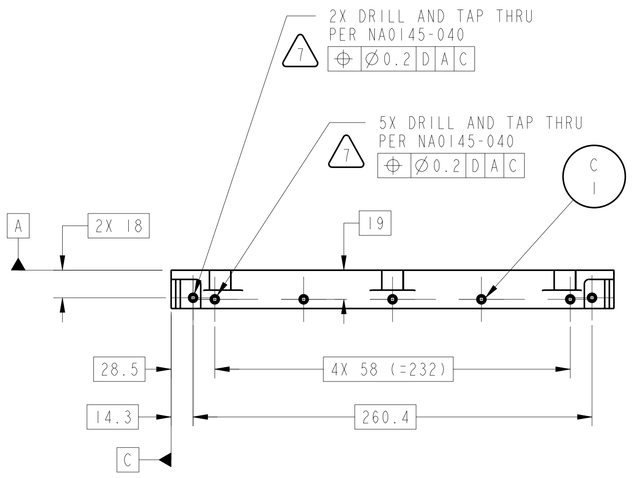

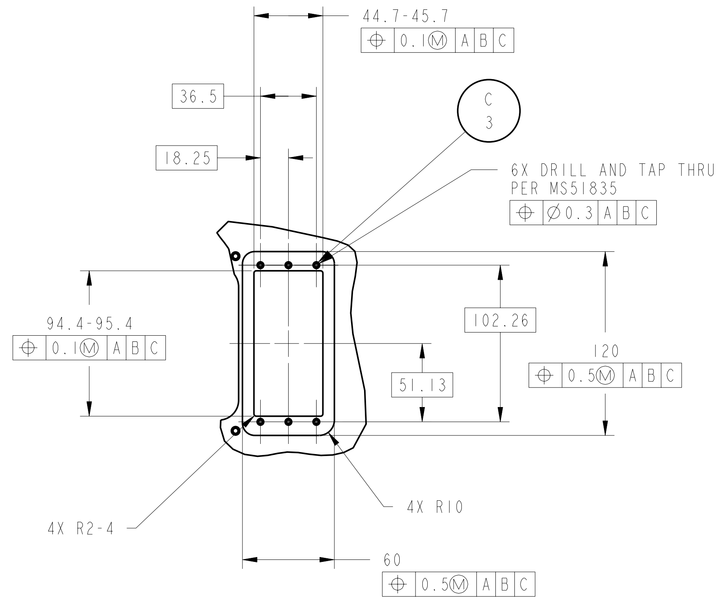

DETAIL D
SCALE 1:2

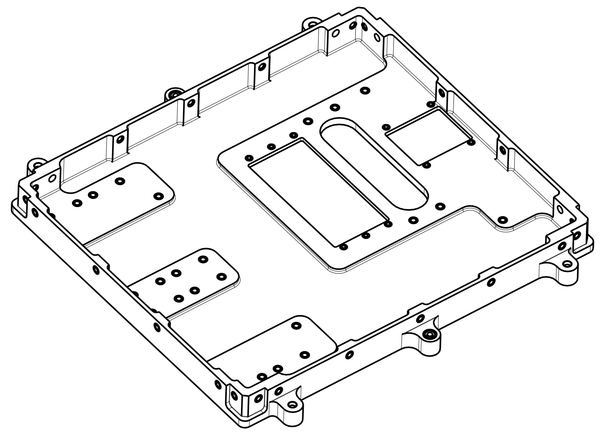

ISO VIEW

TANGENT EDGE LINES SHOWN

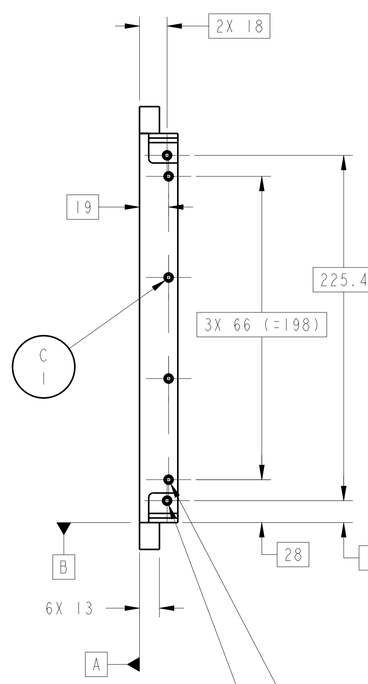

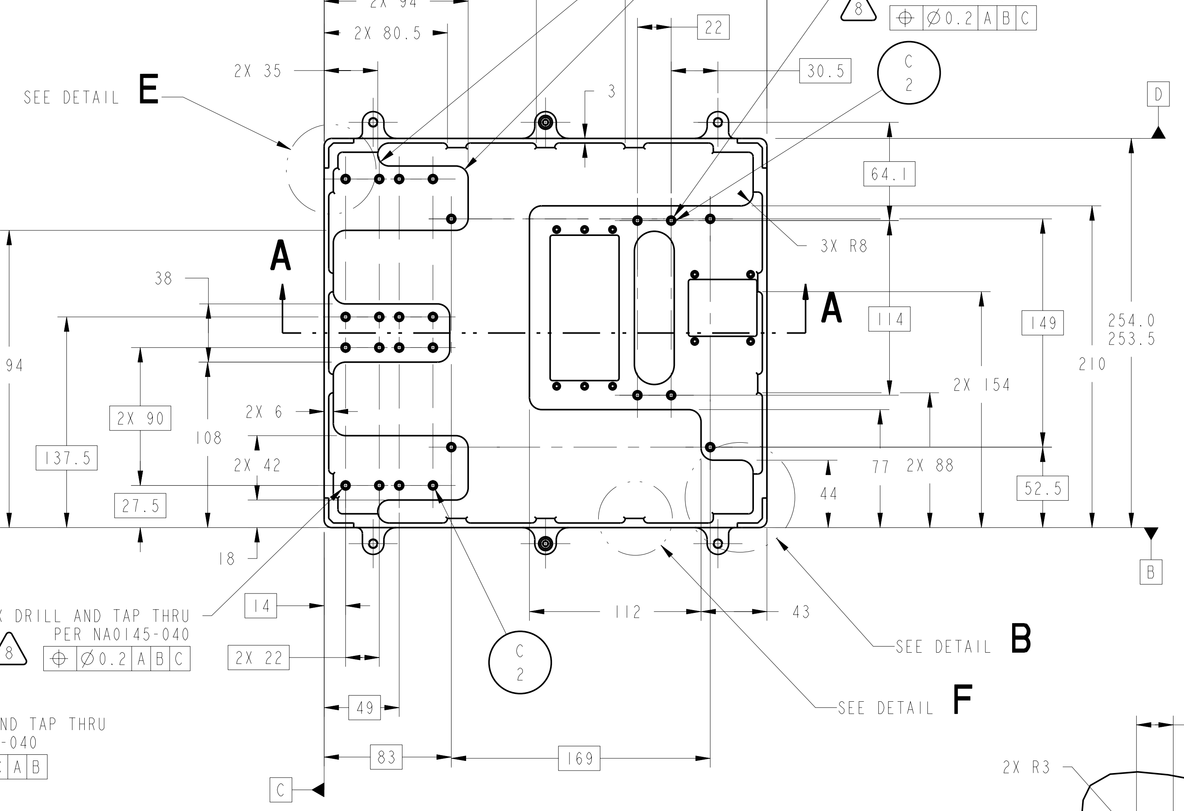

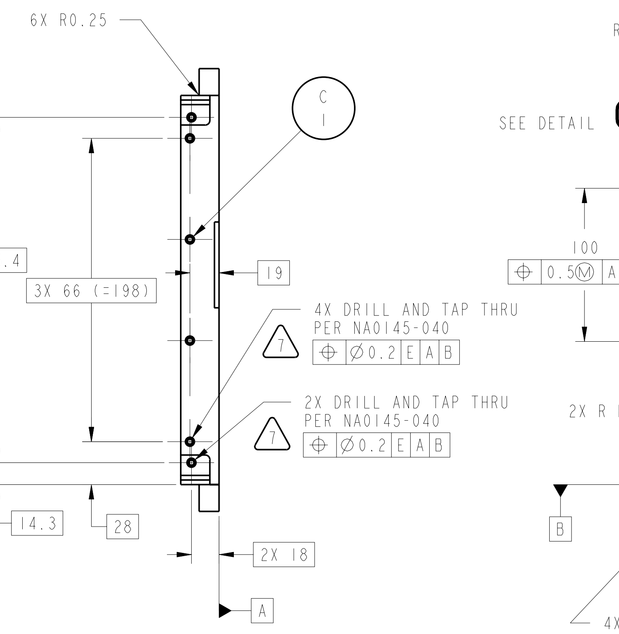

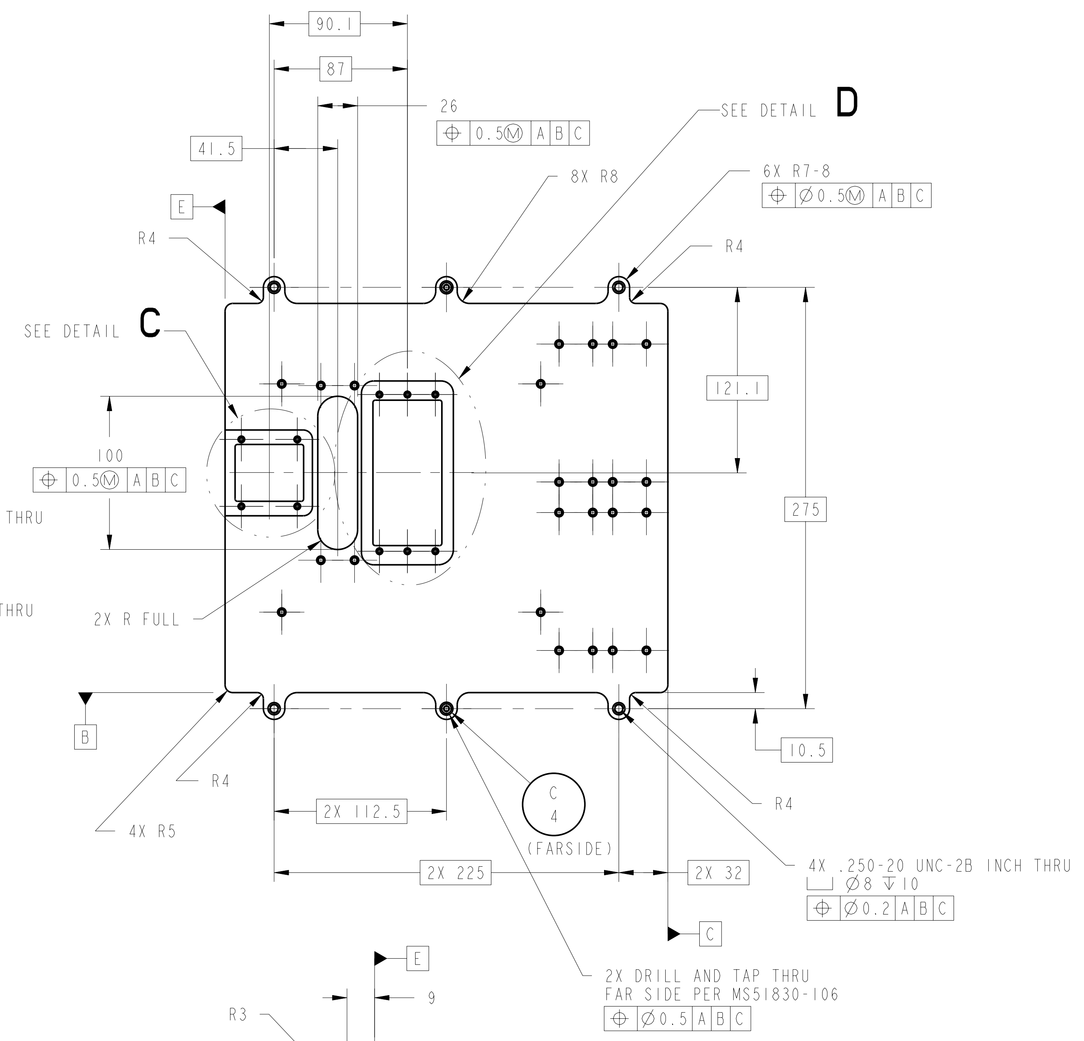

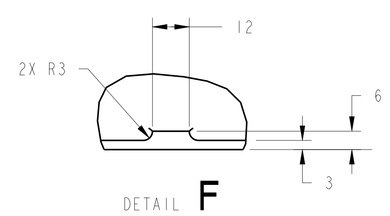

DETAIL F
SCALE 1:1
10 PLACES

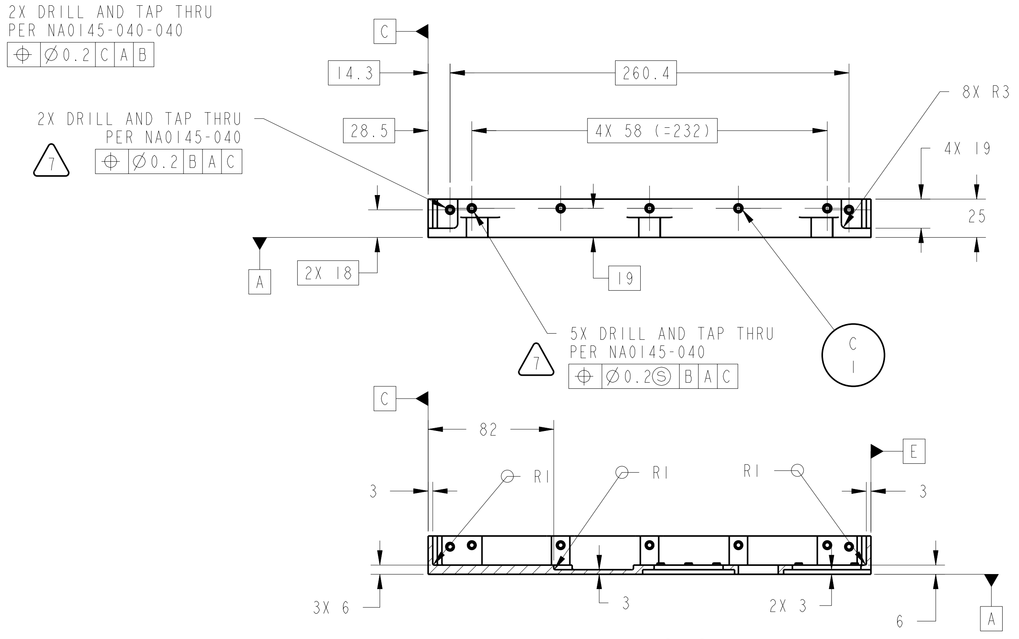

SECTION A-A

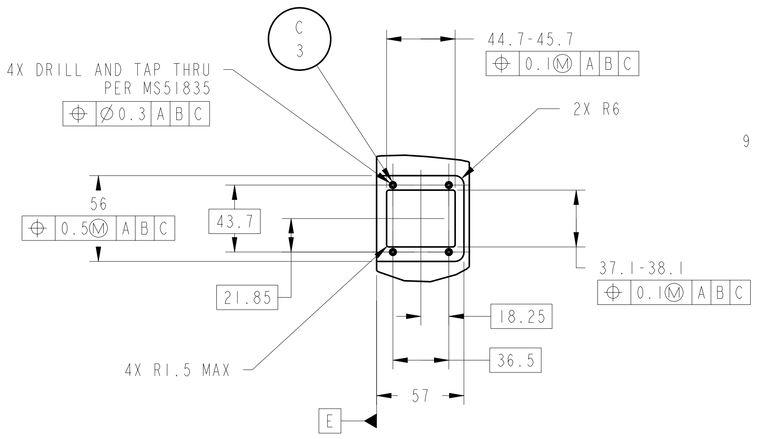

DETAIL C
SCALE 1:2

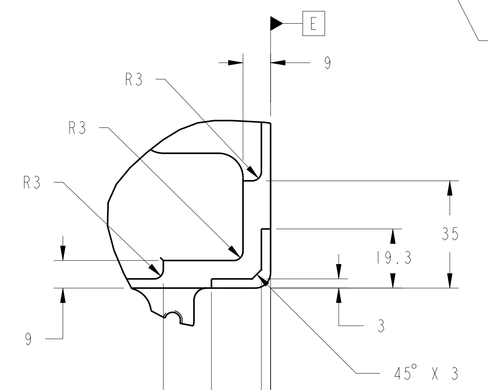

DETAIL B
SCALE 1:1
2 PLACES

CHG	ZONE	DESCRIPTION	APP/DATE
A	G2	ADDED NOTE 7 AND KEELESS INSERTS	W. HOLT 02/23/00

REVISIONS

UNLESS OTHERWISE SPECIFIED:
1. ALL DIMENSIONING AND TOLERANCING PER ASME Y14.5M-1994
2. ALL DIMENSIONS ARE IN MILLIMETERS
3. BREAK EDGES: 0.2-0.5
4. LINEAR TOLERANCES:
   0.5-6 ±0.1
   OVER 6-30 ±0.2
   OVER 30-120 ±0.3
   OVER 120-315 ±0.5
   OVER 315-1000 ±0.8
   OVER 1000-2000 ±1.2
5. ANGULAR TOLERANCES: 0° 30'

CONTRACT	NAS3-27600
CONTRACTOR	ADF, INC.
TASK ORDER	60
DRAFTER	ADF/W. HOLT
ENGINEER	ANLX/W. NARVAEZ
DESIGNER	ANLX/W. NARVAEZ

THIRD ANGLE PROJECTION

NATIONAL AERONAUTICS AND SPACE ADMINISTRATION
JOHN H. GLENN RESEARCH CENTER
LEWIS FIELD
CLEVELAND, OHIO

FOMA CONTROL UNIT ASSEMBLY

67212MELM100

101 BASEPLATE

PDM REL LEVEL: BASELINE PDM REVISION: x.9
PDM DATABASE: FCF
MODEL NAME: 67212MEDM101
PRIOR TO USE VERIFY THE INTENDED PURPOSE IN PDM ("FOR" ATTRIBUTE)

SIZE	DRAWING NUMBER	REV	BLDG	AREA
A0	67212MEDM101	-	333	-

SCALE:	INITIAL REL DATE	SHEET	DISCIPLINE
1:2 AND NOTED	XX/XX/XXXX	1 OF 1	MECHANICAL

UNITS: mm

PRO/E VERSION: 20.0

DRAWING NUMBER 67212MEDM101 A0

NAME:ISBJKM OBJECT:67212MEDM101 DATE:30-Oct-00 10:32:29