## COMMERCIAL PARTS LIST

| PART TYPE | BALLOON NO | DESCRIPTION | QTY/ ASSY |
|---|---|---|---|
| C | 1 | INSERT, KEENSERT, PART NUMBER KNML 5X0.8 (FOR M5 X 0.8 FASTENER) | 2 |

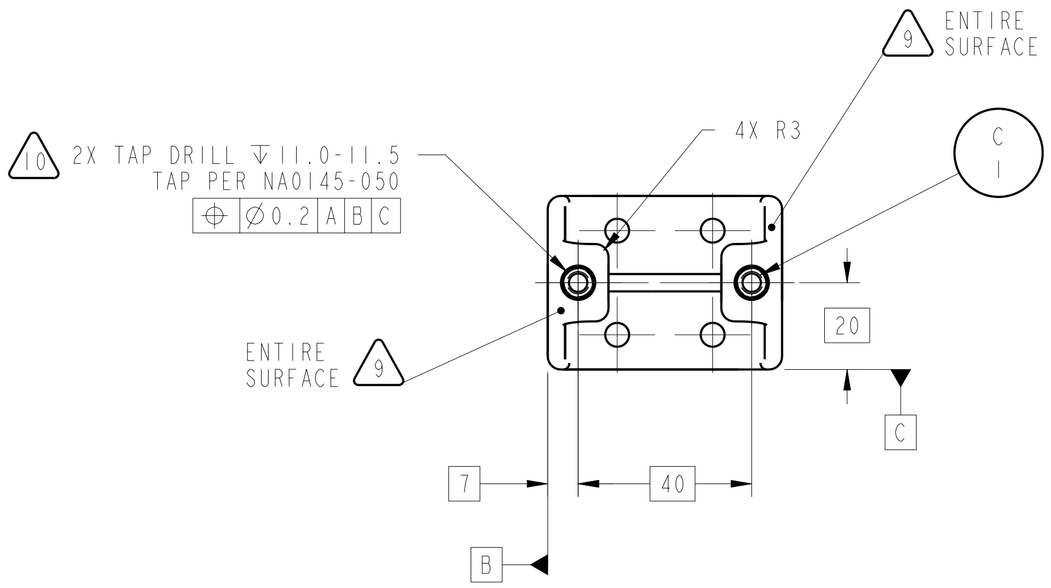


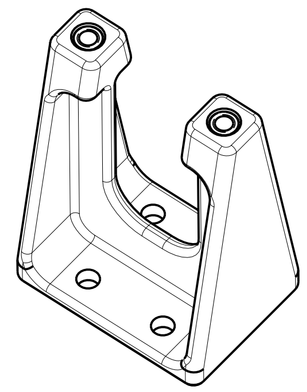

ISO VIEW

TANGENT EDGE LINES SHOWN

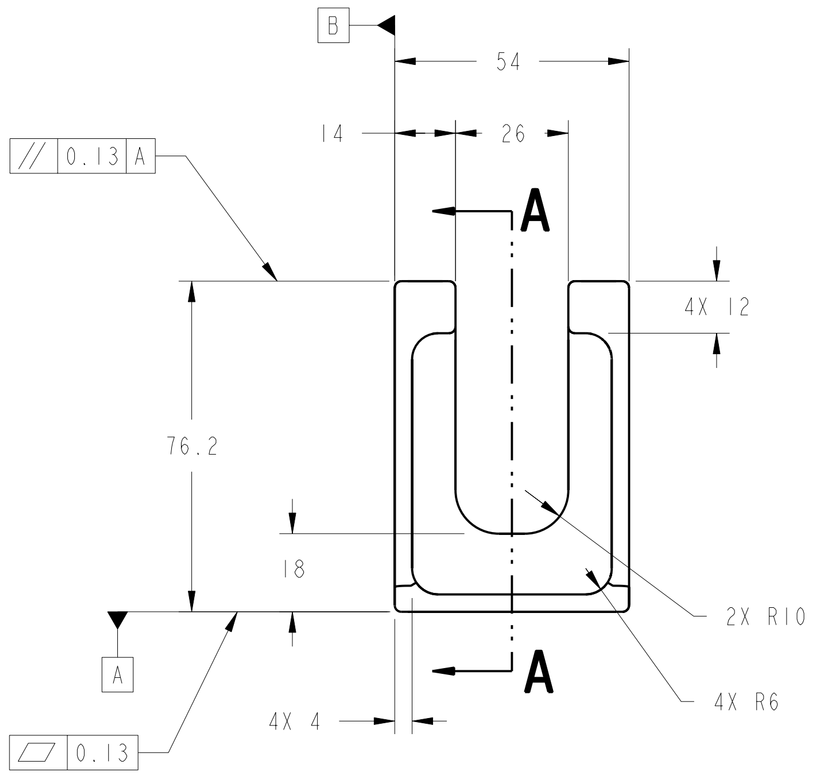


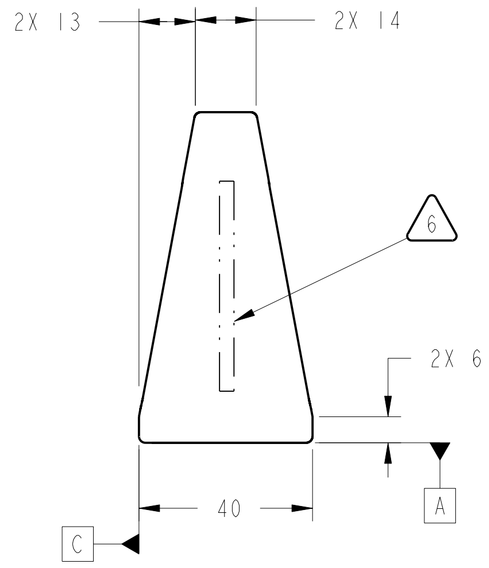


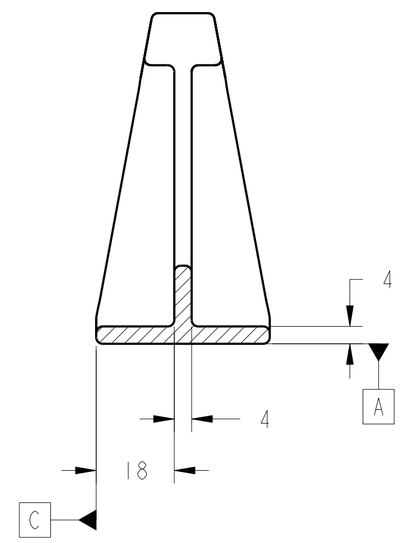


SECTION A-A

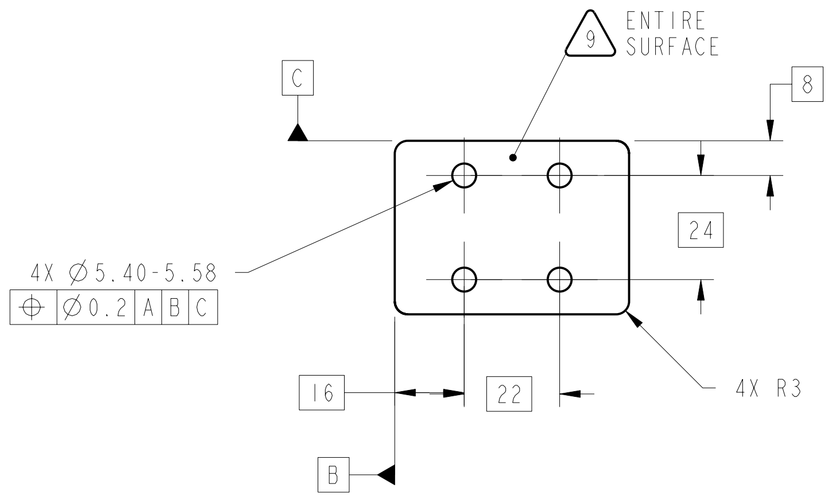


1. MATERIAL: 6061-T651 ALUMINUM PER FEDERAL SPEC QQ-A-250/11.
2. CERTIFICATE OF CONFORMANCE REQUIRED FOR ALL MATERIALS.
3. ULTRASONIC INSPECT PER MIL-STD-2154, PRIOR TO FABRICATION. ACCEPTANCE PER SECTION 5.5.4., TABLE VI, CLASS LEVEL A.
4. 3.2 Ra ALL OVER PER ANSI/ASME B46.1.
5. ALL INSIDE FILLETS AND OUTSIDE CORNERS TO BE R1.5 UNLESS OTHERWISE SPECIFIED.
6. ELECTROCHEMICAL ETCH DRAWING PART NUMBER 67212MEDH986 ON SPECIFIED SURFACE PER SAE AS478, METHOD 7A (ZONE D3).
7. SURFACE TREAT ENTIRE PART PER MIL-C-5541 USE IRIDITE 14.2 OR REQUESTER APPROVED EQUAL PER MIL-C-81706, CLASS 3, FORM II, METHOD B OR C AS APPLICABLE, PRIOR TO INSTALLING KEENSERTS. SPOT TOUCH UP BY METHOD B.
8. FLAT BLACK ANODIZE ENTIRE PART, EXCEPT TAPPED HOLES AND AREAS IDENTIFIED PER NOTE 9, PER MIL-A-8625, TYPE II, CLASS 2, PRIOR TO INSTALLING KEENSERTS. ALL DIMENSIONS APPLY AFTER ANODIZING.
9. MASK AREA NOTED PRIOR TO ANODIZING PER NOTE 8.
10. INSTALL KEENSERTS PER MANUFACTURER'S SPECIFICATIONS AFTER SURFACE TREATMENT PER NOTES 7 AND 8.
11. CLEAN SURFACES WITH 190 PROOF ETHYL ALCOHOL. WIPE WITH CLEAN LINT FREE CLOTH
12. HANDLE WITH CLEAN, LINT-FREE GLOVES.
13. BEFORE STORAGE, PROTECT WITH CONTAMINATION BARRIER. USE CLEAN, NEW, TRANSPARENT, POLYETHYLENE BAG SEALED WITH FIBERGLASS PACKAGING TAPE. SEAL AND MARK WITH IDENTIFICATION NUMBER ON TAG ATTACHED TO BAG.
14. PROCESS PLAN REQUIRED.
15. ESTIMATED WEIGHT=0.090 Kg.

| CHG | ZONE | DESCRIPTION | APP/DATE |
|---|---|---|---|

REVISIONS

PRIOR TO USE VERIFY THE INTENDED PURPOSE IN PDM ("FOR" ATTRIBUTE)

UNLESS OTHERWISE SPECIFIED:
1. ALL DIMENSIONING AND TOLERANCING PER ASME Y14.5M-1994
2. ALL DIMENSIONS ARE IN MILLIMETERS
3. BREAK EDGES: 0.2-0.5
4. LINEAR TOLERANCES:
   0.5-6 ±0.1
   OVER 6-30 ±0.2
   OVER 30- 120 ±0.3
   OVER 120-315 ±0.5
   OVER 315-1000 ±0.8
   OVER 1000-2000 ±1.2
5. ANGULAR TOLERANCES: 0° 30′

| | |
|---|---|
| CONTRACT | NAS3-27600 |
| CONTRACTOR | ADF, INC. |
| TASK ORDER | 60 |
| DRAFTER | ADF/ W. HOLT |
| ENGINEER | ANLX/ D. CATALANO |
| DESIGNER | ADF/ D. ROBINSON |

THIRD ANGLE PROJECTION

NATIONAL AERONAUTICS AND SPACE ADMINISTRATION
JOHN H. GLENN RESEARCH CENTER
LEWIS FIELD
CLEVELAND, OHIO

GC CHECK GAS SUPPLY MANIFOLD ASSEMBLY

67212MELH980

986 75CC MANIFOLD REAR SUPPORT BRACKET

PDM REL LEVEL: RELEASE PDM REVISION: x.2

PDM DATABASE: FCF
MODEL NAME: 67212MEDH986

CHECK FOR ANY OUTSTANDING ECO'S PRIOR TO USE

| SIZE | DRAWING NUMBER | REV | BLDG | AREA |
|---|---|---|---|---|
| A1 | 67212MEDH986 | - | 333 | - |

UNITS: mm

| SCALE: | INITIAL REL DATE | SHEET | DISCIPLINE |
|---|---|---|---|
| 1:1 | XX/XX/XXXX | 1 OF 1 | MECHANICAL |

PRO/E VERSION: 20.0

SIZE A1 DRAWING NUMBER 67212MEDH986 REV -

NAME:EDJEN OBJECT:67212MEDH986 DATE:30-Oct-00 10:51:55