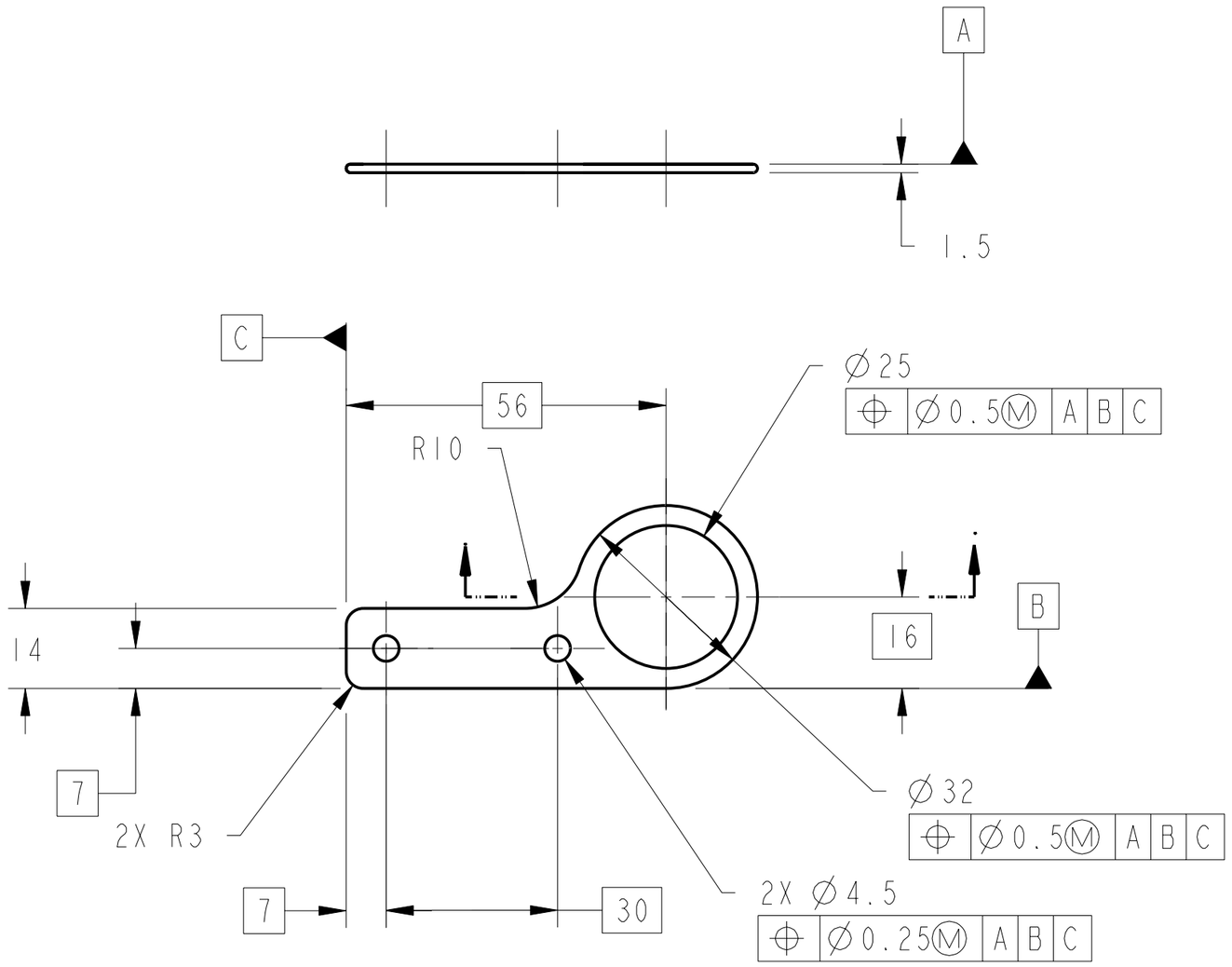

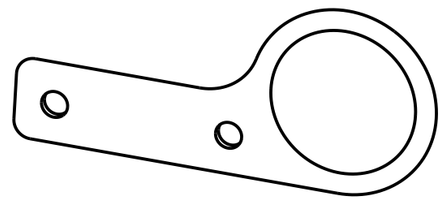

1. MATERIAL:
   TYPE 304 STAINLESS STEEL PER FEDERAL SPEC QQ-S-763 OR QQ-S-766.
2. CERTIFICATE OF CONFORMANCE REQUIRED FOR MATERIAL.
3. 3.2 Ra ALL MACHINED SURFACES PER ANSI/ASME B46.1, UNLESS OTHERWISE SPECIFIED.
4. CLEAN AND PASSIVATE PER MIL-S-5002, PARAGRAPHS 3.4.2.4 AND 3.4.2.4.1 AND FEDERAL SPECIFICATION QQ-P-35.
5. IDENTIFY BY TAGGING WITH DRAWING PART NUMBER 67212MEDM984, PER SAE AS478, METHOD 35.
6. HANDLE WITH CLEAN, LINT-FREE GLOVES.
7. BEFORE STORAGE, PROTECT WITH CONTAMINATION BARRIER. USE CLEAN, NEW, TRANSPARENT, POLYETHELENE BAG SEALED WIRH FIBERGLASS PACKAGING TAPE. SEAL AND MARK WITH IDENTIFICATION NUMBER ON TAG ATTACHED TO BAG.
8. PROCESS PLAN REQUIRED.
9. ESTIMATED WEIGHT: 0.011 Kg.

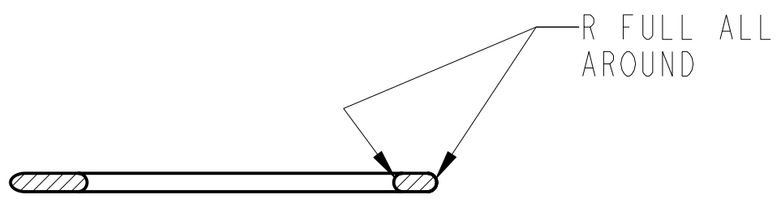

SECTION A-A
SCALE 2:1

CHG	ZONE	DESCRIPTION	APP/DATE

REVISIONS

UNLESS OTHERWISE SPECIFIED:

1. ALL DIMENSIONING AND TOLERANCING PER ASME Y14.5M-1994
2. ALL DIMENSIONS ARE IN MILLIMETERS
3. BREAK EDGES: 0.2-0.5
4. LINEAR TOLERANCES:
   0.5-6 ±0.1
   OVER 6-30 ±0.2
   OVER 30- 120 ±0.3
   OVER 120-315 ±0.5
   OVER 315-1000 ±0.8
   OVER 1000-2000 ±1.2
5. ANGULAR TOLERANCES: 0° 30′

CONTRACT	NAS3-27600
CONTRACTOR	ANALEX CORP.
TASK ORDER	60
DRAFTER	ANLX/F. PRYLL
ENGINEER	ANLX/D. CATALANO
DESIGNER	ADF/D. ROBINSON

THIRD ANGLE PROJECTION

NATIONAL AERONAUTICS AND SPACE ADMINISTRATION
JOHN H. GLENN RESEARCH CENTER
LEWIS FIELD
CLEVELAND, OHIO

CG CHECK GAS SUPPLY MANIFOLD ASSEMBLY

67212MELH980

984 75cc MANIFOLD TETHER ATTACHMENT PLATE

PDM REL LEVEL: RELEASE PDM REVISION: x.2
PDM DATABASE: FCF
MODEL NAME: 67212MEDH984
PRIOR TO USE VERIFY THE INTENDED PURPOSE IN PDM ("FOR" ATTRIBUTE)

SIZE	DRAWING NUMBER	REV	BLDG	AREA
A2	67212MEDH984	-	333	-
			UNITS: mm	
SCALE: 1:1	INITIAL REL DATE XX/XX/XXXX	SHEET 1 OF 1	DISCIPLINE MECHANICAL	

PRO/E VERSION: 20.0

SIZE A2 DRAWING NUMBER 67212MEDH984 REV -

NAME:EDJEN OBJECT:67212MEDH984 DATE:30-Oct-00 10:51:07