## COMMERCIAL PARTS LIST

| PART TYPE | BALLOON NO | DESCRIPTION | QTY ASSY |
|---|---|---|---|
| C | 1 | INSERT, KEENSERT, PART NUMBER KNCML 4 X 0.7 (FOR 4X0.7 FASTENER) | 6 |
| C | 2 | BONDABLE TEFLON (PTFE) SHEET PER ASTM D 1710 D 31.8-31.9 WIDE X 1/32 INCH THK, LENGTH AS REQUIRED | 2 |

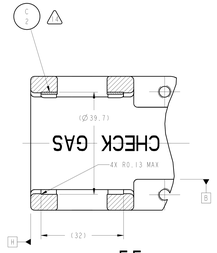


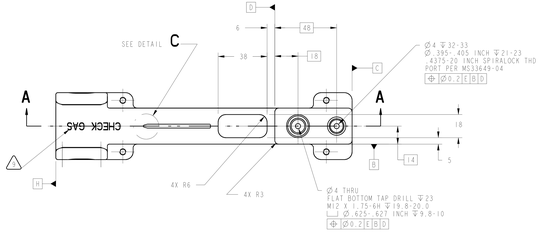


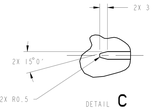


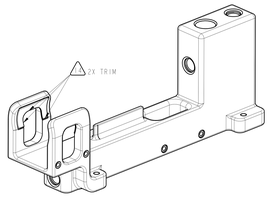


1. MATERIAL: 6061-T651 ALUMINUM PER FEDERAL SPEC QQ-A-250/11.
2. CERTIFICATE OF CONFORMANCE REQUIRED FOR ALL MATERIALS.
3. ULTRASONIC INSPECT PER MIL-STD-2154, PRIOR TO FABRICATION. ACCEPTANCE PER SECTION 5.5.4., TABLE VI, CLASS LEVEL A.
4. 3.2 Ra ALL MACHINED SURFACES UNLESS OTHERWISE NOTED PER ANSI/ASME B46.1.
5. ALL OUTSIDE CORNERS TO BE R1.5 UNLESS OTHERWISE SPECIFIED.
6. ALL INSIDE FILLETS TO BE R3.0 UNLESS OTHERWISE SPECIFIED.
7. ALL INTERNAL PORTS MUST BE BLENDED SMOOTH WITH NO FEATHERED EDGES OR BURRS.
1. ELECTROCHEMICAL ETCH DRAWING PART NUMBER 67212MEDH981 ON SPECIFIED SURFACE PER SAE AS478, METHOD 7A (ZONE D12).
1. ELECTROCHEMICAL ETCH "CHECK GAS" ON SPECIFIED SURFACE IN 9-10 HIGH CHARACTERS AS SHOWN, PER SAE AS478, METHOD 7A (ZONE G13).
10. FINISHED PART MUST PASS DYE PENETRANT INSPECTION PER ASTM E1417. ACCEPTANCE PER MIL-STD-1907.
11. SURFACE TREATMENT PER MIL-C-5541, CLASS 3. USE IRIDITE 14-2 OR REQUESTER APPROVED EQUAL PER MIL-C-81706, CLASS 3, FORM II, METHOD B OR C AS APPLICABLE PRIOR TO INSTALLING KEENSERTS. SPOT TOUCH UP BY METHOD B.
12. FLAT BLACK ANODIZE EXTERIOR SURFACES EXCEPT TAPPED HOLES, INTERNAL PASSAGES AND AREAS IDENTIFIED PER NOTE 13. PER MIL-A-8625, TYPE II, CLASS 2. PRIOR TO INSTALLING KEENSERTS. ALL DIMENSIONS APPLY AFTER ANODIZING.
1. MASK AREA NOTED PRIOR TO ANODIZING PER NOTE 12.
1. TEFLON SHEET TO BE BONDED IN PLACE USING 3M SCOTCHWELD 1838 B/A EPOXY AS REQUIRED TRIM TO MATCH CONTOUR OF MANIFOLD (2 PLACES).
1. INSTALL KEENSERTS PER MANUFACTURER'S SPECIFICATIONS AFTER SURFACE TREATMENT PER NOTES 11 AND 12.
16. CLEAN SURFACES WITH 190 PROOF ETHYL ALCOHOL. WIPE WITH CLEAN LINT FREE CLOTH.
17. HANDLE WITH CLEAN, LINT-FREE GLOVES.
18. BEFORE STORAGE, PROTECT WITH CONTAMINATION BARRIER. USE CLEAN, NEW, TRANSPARENT, POLYETHYLENE BAG SEALED WITH FIBERGLASS PACKAGING TAPE. SEAL AND MARK WITH IDENTIFICATION NUMBER ON TAG ATTACHED TO BAG.
19. PROCESS PLAN REQUIRED.
20. ESTIMATED WEIGHT:0.747 Kg.

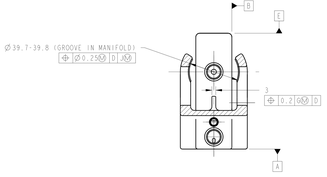


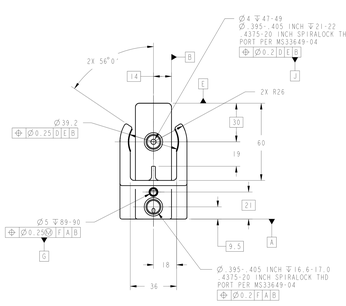


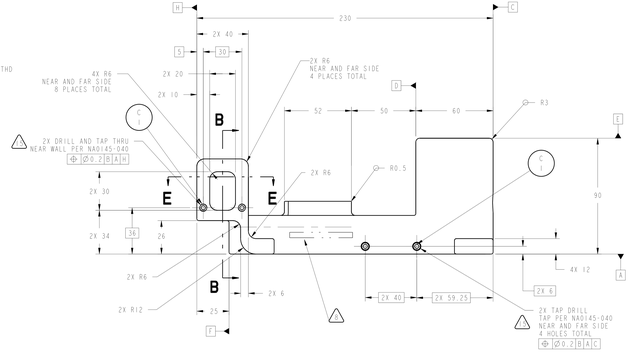


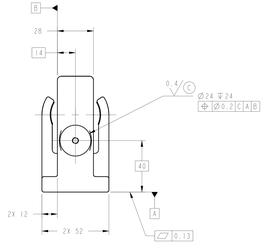


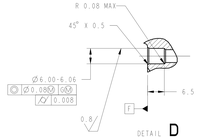


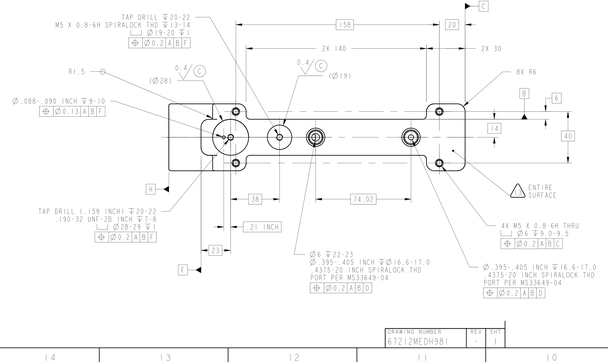


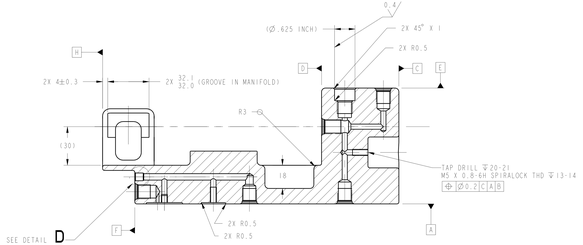


| DRAWING NUMBER | REV | SHT |
|---|---|---|
| 67212MEDH981 | | 1 |

PRIOR TO USE VERIFY THE INTENDED PURPOSE IN PDM (ITEM: ATTR:DATE)

UNLESS OTHERWISE SPECIFIED:
1. ALL DIMENSIONING AND TOLERANCING PER ASME Y14.5M-1994.
2. ALL DIMENSIONS ARE IN MILLIMETERS.
3. BREAK EDGES: 0.2-0.5
4. LINEAR TOLERANCES: OVER 0-6 ±0.1
OVER 6-30 ±0.2
OVER 30-120 ±0.3
OVER 120-315 ±0.5
OVER 315-1000 ±0.8
OVER 1000-2000 ±1.2
5. ANGULAR TOLERANCE: 0°30'

PDM REL LEVEL: **RELEASE** PDM REVISION: **w.7**

PDM DATABASE: **PCF**
MODEL NAME: **67212MEDH981**
CHECK FOR NEW INSTANCE BEFORE PROM TO USE

| | |
|---|---|
| CONTRACT | NAS3-27600 |
| CONTRACTOR | ADF, INC. |
| SCALE | 4:1 |
| DRAFTER | ADF/W. HOLT |
| ENGINEER | ANLV/D. CATALANO |
| DESIGNER | ADF/G. ROBINSON |

THIRD ANGLE PROJECTION

| CHG | ZONE | DESCRIPTION | APP/DATE |
|---|---|---|---|
| | | REVISIONS | |

NATIONAL AERONAUTICS AND SPACE ADMINISTRATION
JOHN H. GLENN RESEARCH CENTER
21000 BROOKPARK
CLEVELAND, OHIO

GC CHECK GAS SUPPLY MANIFOLD ASSEMBLY

67212MEDH950

(98) GC CHECK GAS SUPPLY MANIFOLD

| SIZE | DRAWING NUMBER | REV | BLDG | AREA |
|---|---|---|---|---|
| R2 | 67212MEDH981 | | 333 | — |
| SCALE AND NOTES | INITIAL REL DATE 04/25/2014 | SHEET 1 OF 1 | DISCIPLINE MECHANICAL | |

PROJ/E VERSION: 20.0

R2 67212MEDH981