COMMERCIAL PARTS LIST

PART TYPE	BALLOON NO	DESCRIPTION	QTY/ ASSY
C	1	INSERT, KEENSERT, PART NUMBER KNML 5X0.8 (FOR M5 X 0.8 FASTENER)	2 (10)

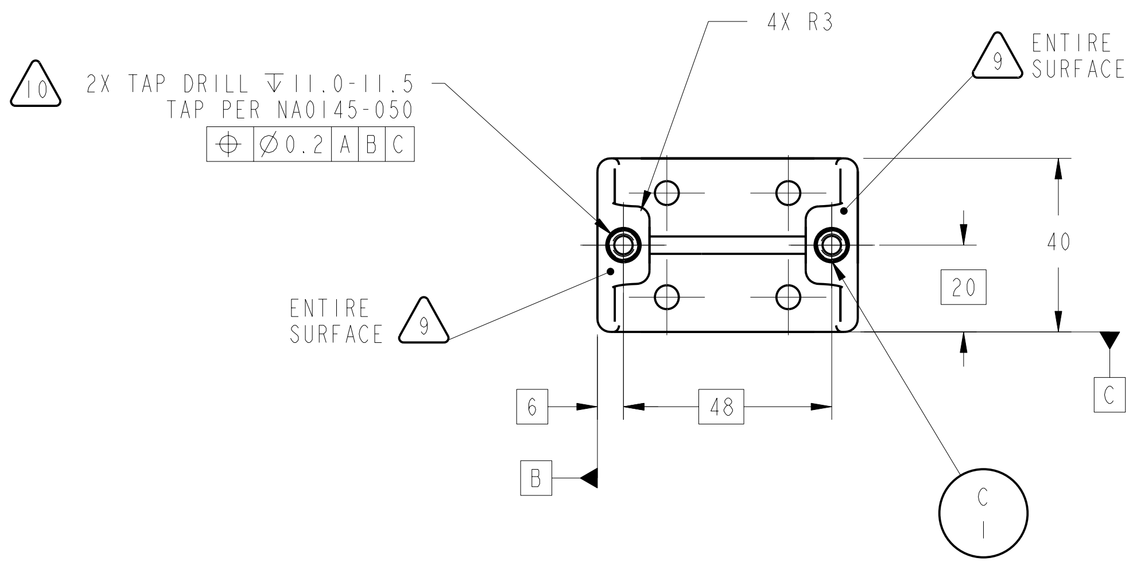

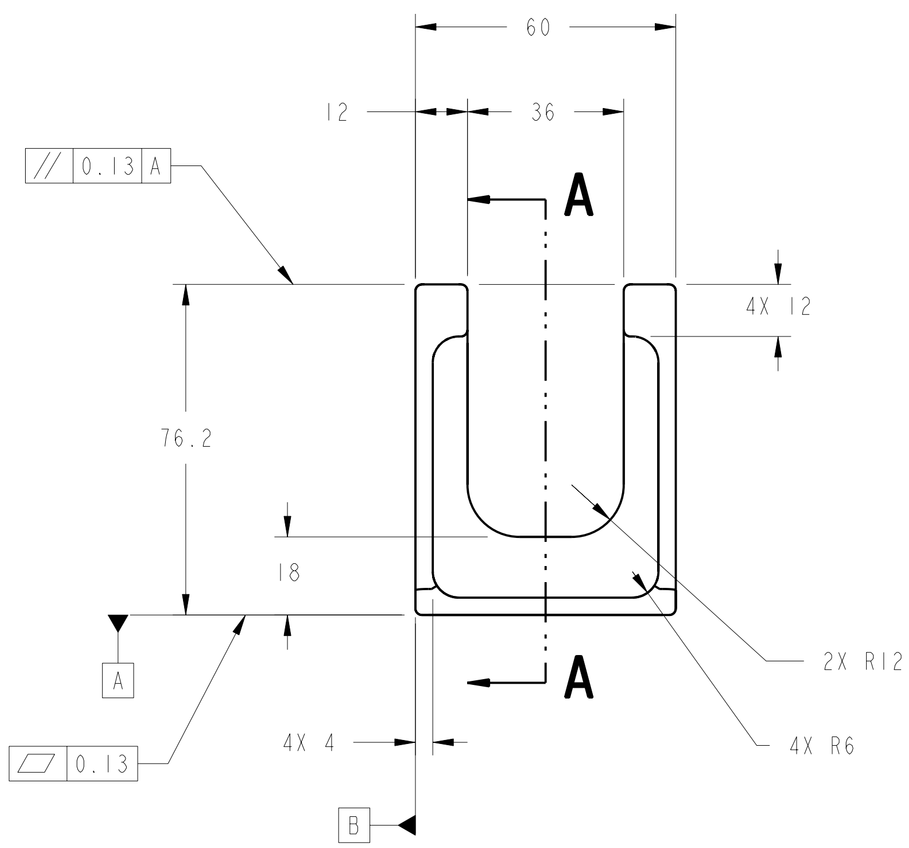

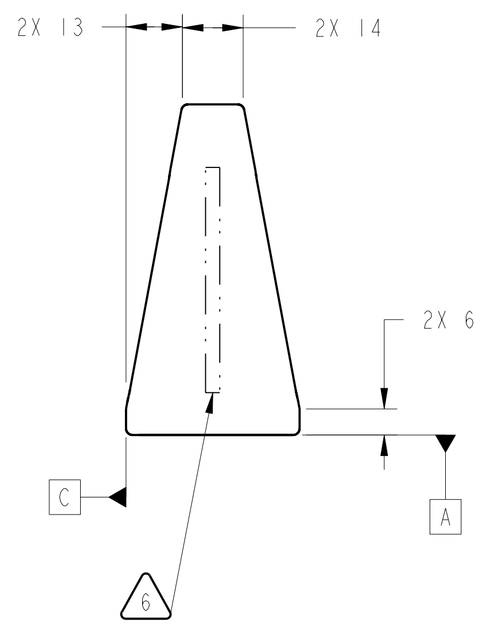

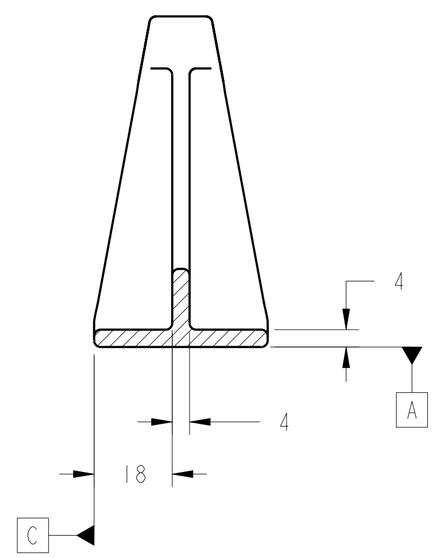

SECTION **A-A**

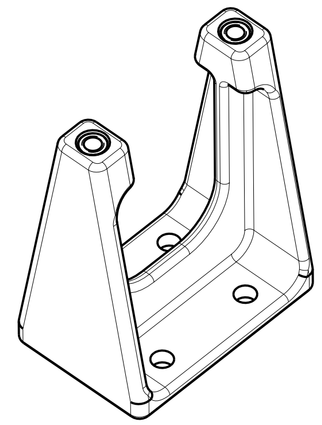

ISO VIEW

TANGENT EDGE LINES SHOWN

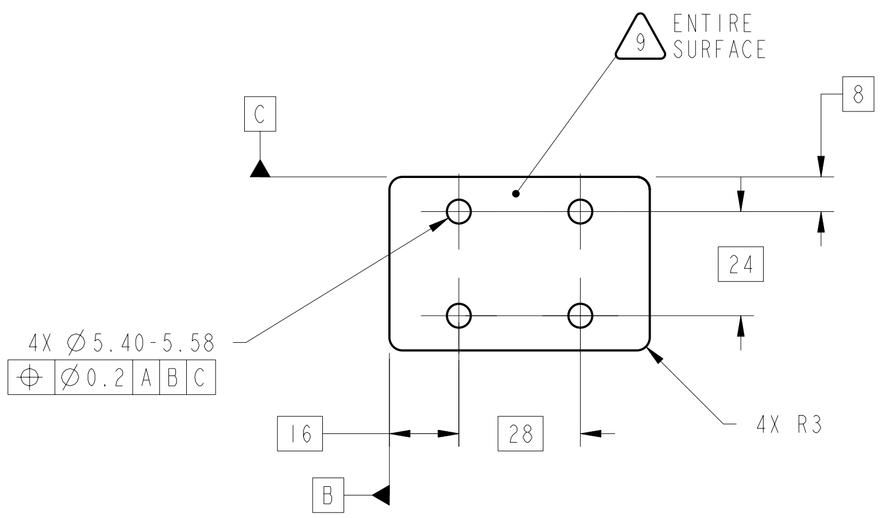

1. MATERIAL: 6061-T651 ALUMINUM PER FEDERAL SPEC QQ-A-250/11.
2. CERTIFICATE OF CONFORMANCE REQUIRED FOR ALL MATERIALS.
3. ULTRASONIC INSPECT PER MIL-STD-2154, PRIOR TO FABRICATION. ACCEPTANCE PER SECTION 5.5.4., TABLE VI, CLASS LEVEL A.
4. 3.2 Ra ALL OVER PER ANSI/ASME B46.1.
5. ALL INSIDE FILLETS AND OUTSIDE CORNERS TO BE R1.5 UNLESS OTHERWISE SPECIFIED.
6. (6) ELECTROCHEMICAL ETCH DRAWING PART NUMBER 67212MEDH973 ON SPECIFIED SURFACE PER SAE AS478, METHOD 7A (ZONE D3).
7. SURFACE TREAT ENTIRE PART PER MIL-C-5541 USE IRIDITE 14.2 OR REQUESTER APPROVED EQUAL PER MIL-C-81706, CLASS 3, FORM 11, METHOD B OR C AS APPLICABLE, PRIOR TO INSTALLING KEENSERTS. SPOT TOUCH UP BY METHOD B.
8. FLAT BLACK ANODIZE ENTIRE PART, EXCEPT TAPPED HOLES AND AREAS IDENTIFIED PER NOTE 9, PER MIL-A-8625, TYPE II, CLASS 2, PRIOR TO INSTALLING KEENSERTS. ALL DIMENSIONS APPLY AFTER ANODIZING.
9. (9) MASK AREA NOTED PRIOR TO ANODIZING PER NOTE 8.
10. (10) INSTALL KEENSERTS PER MANUFACTURER'S SPECIFICATIONS AFTER SURFACE TREATMENT PER NOTES 7 AND 8.
11. CLEAN SURFACES WITH 190 PROOF ETHYL ALCOHOL. WIPE WITH CLEAN LINT FREE CLOTH
12. HANDLE WITH CLEAN, LINT-FREE GLOVES.
13. BEFORE STORAGE, PROTECT WITH CONTAMINATION BARRIER. USE CLEAN, NEW, TRANSPARENT, POLYETHYLENE BAG SEALED WITH FIBERGLASS PACKAGING TAPE. SEAL AND MARK WITH IDENTIFICATION NUMBER ON TAG ATTACHED TO BAG.
14. PROCESS PLAN REQUIRED.
15. ESTIMATED WEIGHT=0.090 Kg.

CHG	ZONE	DESCRIPTION	APP/DATE

REVISIONS

PRIOR TO USE VERIFY THE INTENDED PURPOSE IN PDM ("FOR" ATTRIBUTE)

UNLESS OTHERWISE SPECIFIED:
1. ALL DIMENSIONING AND TOLERANCING PER ASME Y14.5M-1994
2. ALL DIMENSIONS ARE IN MILLIMETERS
3. BREAK EDGES: 0.2-0.5
4. LINEAR TOLERANCES:
   0.5-6 ±0.1
   OVER 6-30 ±0.2
   OVER 30-120 ±0.3
   OVER 120-315 ±0.5
   OVER 315-1000 ±0.8
   OVER 1000-2000 ±1.2
5. ANGULAR TOLERANCES: 0° 30′

CONTRACT	NAS3-27600
CONTRACTOR	ADF, INC.
TASK ORDER	60
DRAFTER	ADF/ W. HOLT
ENGINEER	ANLX/ D. CATALANO
DESIGNER	ADF/ D. ROBINSON

THIRD ANGLE PROJECTION

NATIONAL AERONAUTICS AND SPACE ADMINISTRATION
JOHN H. GLENN RESEARCH CENTER
LEWIS FIELD
CLEVELAND, OHIO

GC ARGON & HELIUM GAS SUPPLY MANIFOLD ASSEMBLIES
67212MELH965 & 975

973 300CC MANIFOLD REAR SUPPORT BRACKET

PDM REL LEVEL: **RELEASE** PDM REVISION: **x.2**
PDM DATABASE: **FCF**
MODEL NAME: **67212MEDH973**
CHECK FOR ANY OUTSTANDING ECO'S PRIOR TO USE

SIZE	DRAWING NUMBER	REV	BLDG	AREA
A1	67212MEDH973	-	333	-
			UNITS: mm	
SCALE: 1:1	INITIAL REL DATE XX/XX/XXXX	SHEET 1 OF 1	DISCIPLINE MECHANICAL	

REV -
SIZE A1 DRAWING NUMBER 67212MEDH973

PRO/E VERSION: 20.0

NAME:EDJEN OBJECT:67212MEDH973 DATE:30-Oct-00 10:48:58