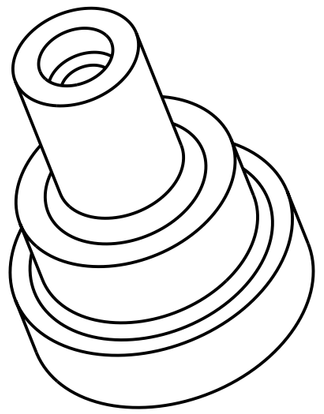

8. BEFORE STORAGE, PROTECT WITH CONTAMINATION BARRIER. USE CLEAN, NEW, TRANSPARENT, POLYETHYLENE BAG FOR SMALL ITEMS, OR 4 MIL THICK MINIMUM POLYETHYLENE SHEET SEALED WITH FIBERGLASS PACKAGING TAPE. SEAL AND MARK WITH IDENTIFICATION NUMBER ON TAG ATTACHED TO BAG.

9. PROCESS PLAN REQUIRED.

10. ESTIMATED WEIGHT = 0.014 LB.

1. MATERIAL:
MAKE FROM PARKER P/N 4-2QIW-SSR (316L)

2. PROTECT THIS SURFACE FROM NICKS AND SCRATCHES.

3. 63 Ra ALL NEW MACHINED SURFACES UNLESS OTHERWISE NOTED.

4. IDENTIFY BY TAGGING WITH DRAWING PART NUMBER 67212MEDH947, PER SAE AS478, METHOD 35.

5. CLEAN AND PASSIVATE PER MIL-S-5002, PARAGRAPHS 3.4.2.4 AND 3.4.2.4.1 AND FEDERAL SPECIFICATION QQ-P-35.

6. CLEAN SURFACES WITH 190 PROOF ETHYL ALCOHOL. WIPE WITH CLEAN COTTON SWABS AND/OR LINT-FREE CLOTH.

7. HANDLE WITH CLEAN, LINT-FREE GLOVES.

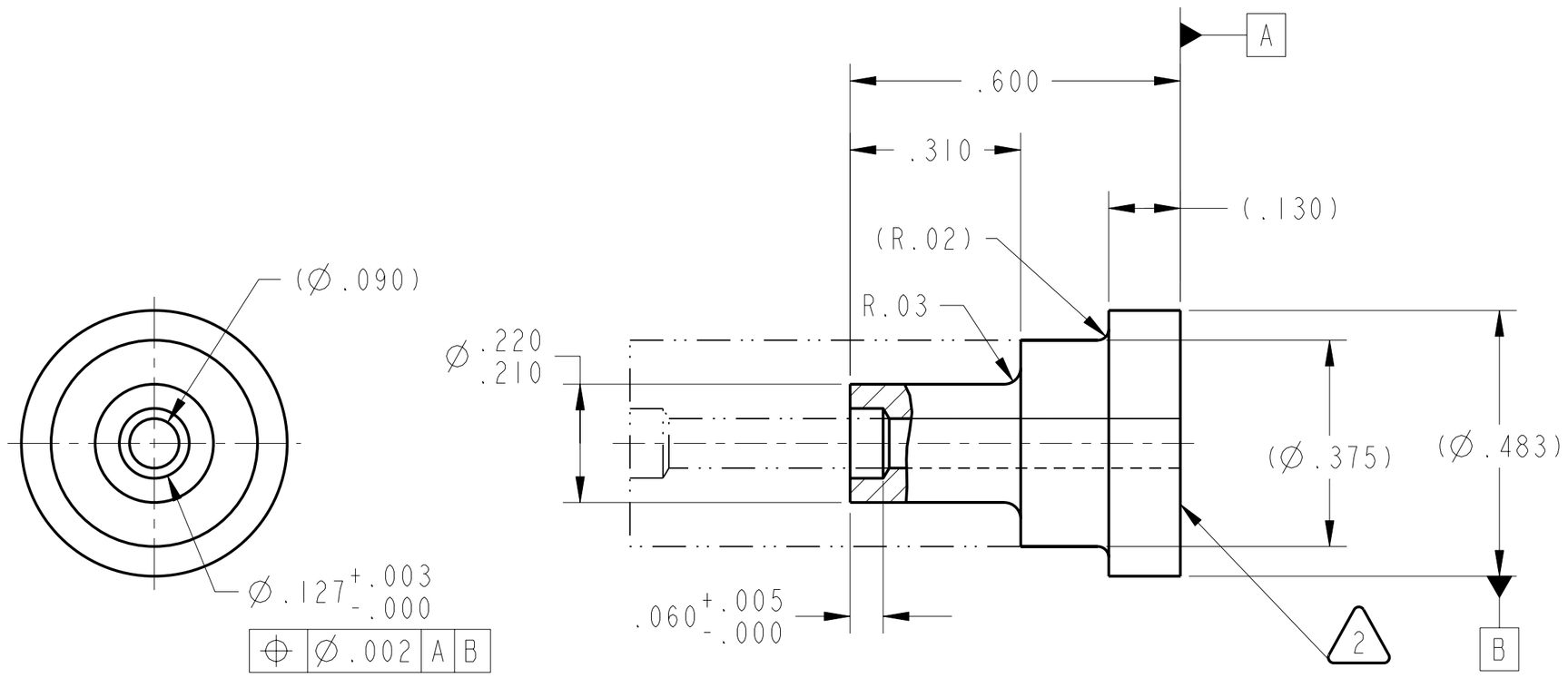

CHG	ZONE	DESCRIPTION	APP/DATE

REVISIONS

PRIOR TO USE VERIFY THE INTENDED PURPOSE IN PDM ("FOR" ATTRIBUTE)

UNLESS OTHERWISE SPECIFIED DIMENSIONS ARE IN INCHES		CONTRACT XXX CONTRACTOR XXX	
TOLERANCE ON		TASK ORDER	XXX
.X	± 0.0	DRAFTER	J. ASSION
.XX	± 0.01	ENGINEER	D. CATALANO
.XXX	± 0.005	DESIGNER	D. ROBINSON
FRACTION	± -	DIMENSIONING AND TOLERANCING PER ASME Y14.5M-1994	
ANGULAR	± 0.50°		
BREAK EDGES	.008-.020		

PDM REL LEVEL: **RELEASE** PDM REVISION: **x.2**

PDM DATABASE: **FCF**
MODEL NAME: **67212MEDH947**

CHECK FOR ANY OUTSTANDING ECO'S PRIOR TO USE

NATIONAL AERONAUTICS AND SPACE ADMINISTRATION
JOHN H. GLENN RESEARCH CENTER
LEWIS FIELD
CLEVELAND, OHIO

SUPPLY PRESSURE REGULATOR WELDED ASSEMBLY

67212MEDH969

ULTRASEAL GLAND

SIZE	DRAWING NUMBER	REV	BLDG	AREA
C	67212MEDH947	X	333	XXX
			UNITS: INCH	
SCALE: 4/1	INITIAL REL DATE 08/17/00	SHEET 1 OF 1	DISCIPLINE MECHANICAL	

PRO/E VERSION: 18.0

SIZE C DRAWING NUMBER 67212MEDH947 REV X

NAME:EDJEN OBJECT:67212MEDH947 DATE:30-Oct-00 10:45:48