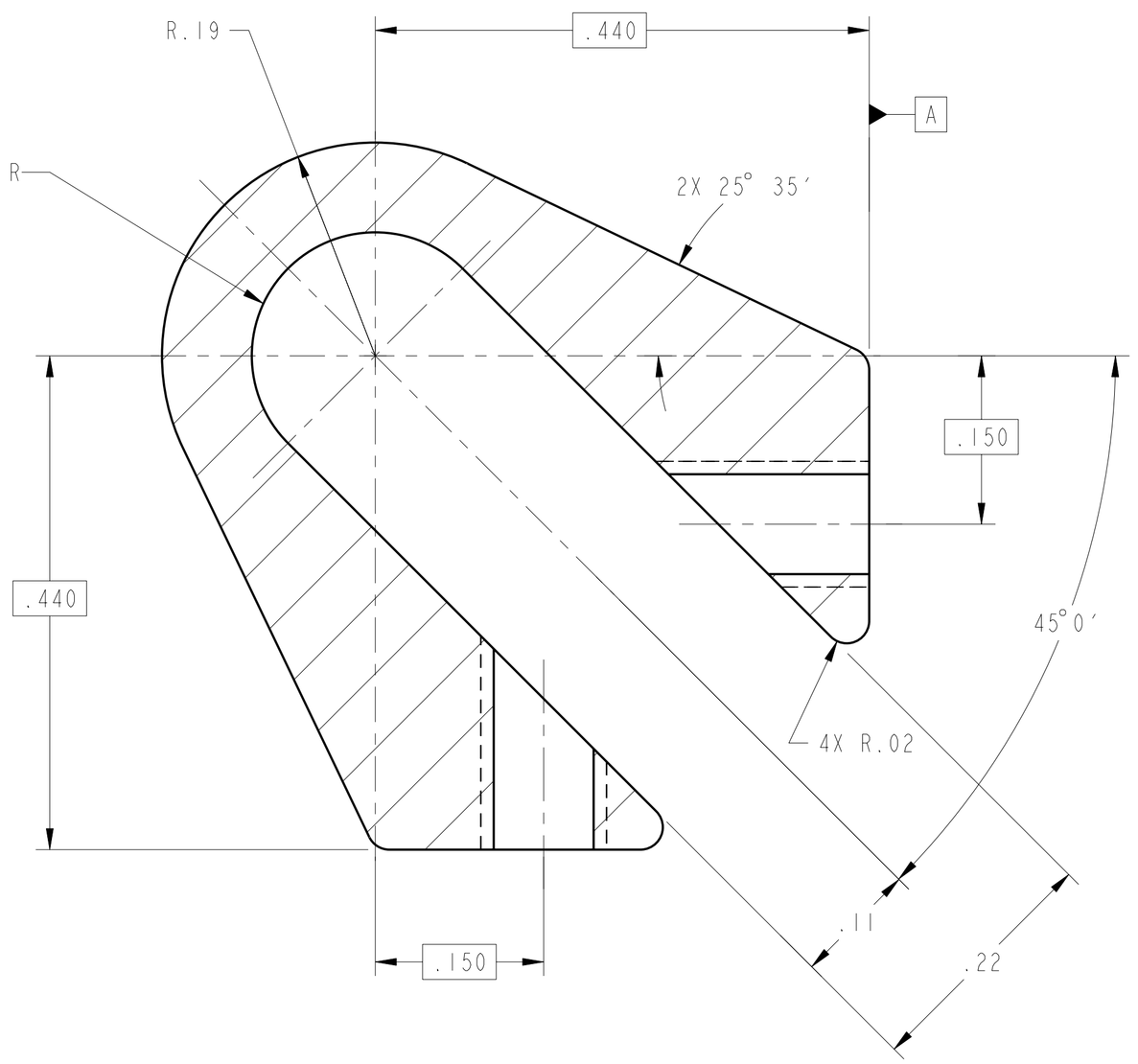

A-A

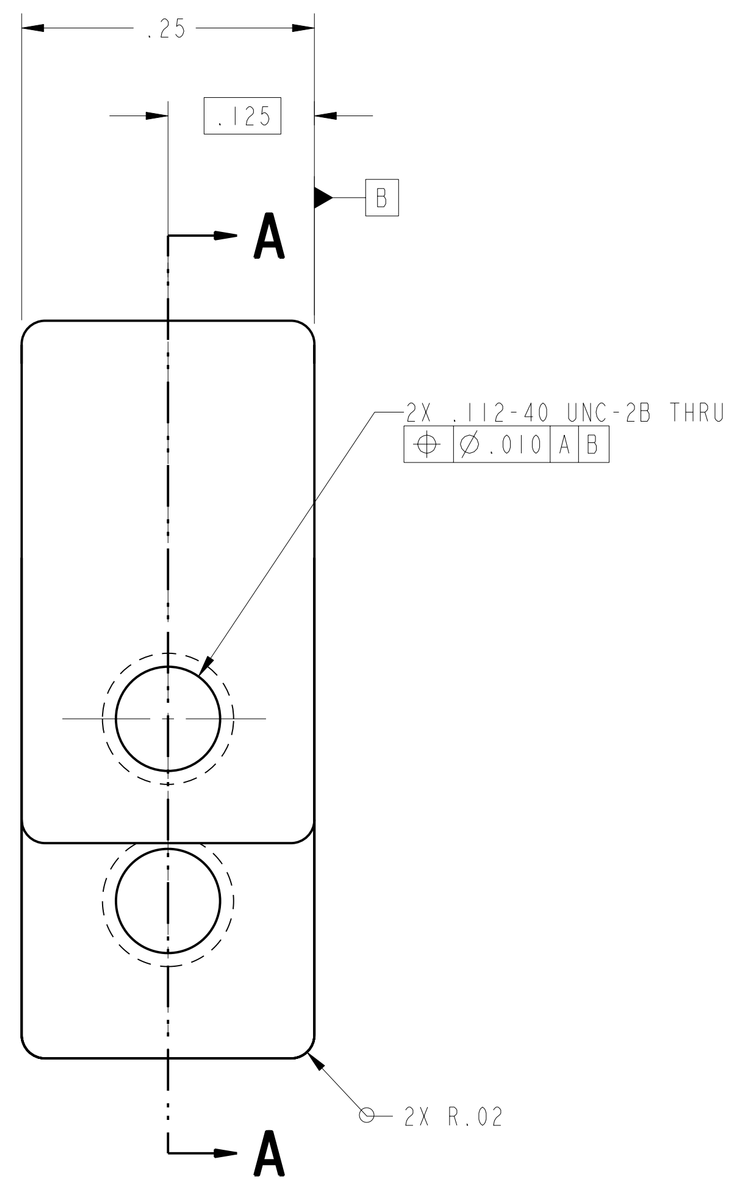

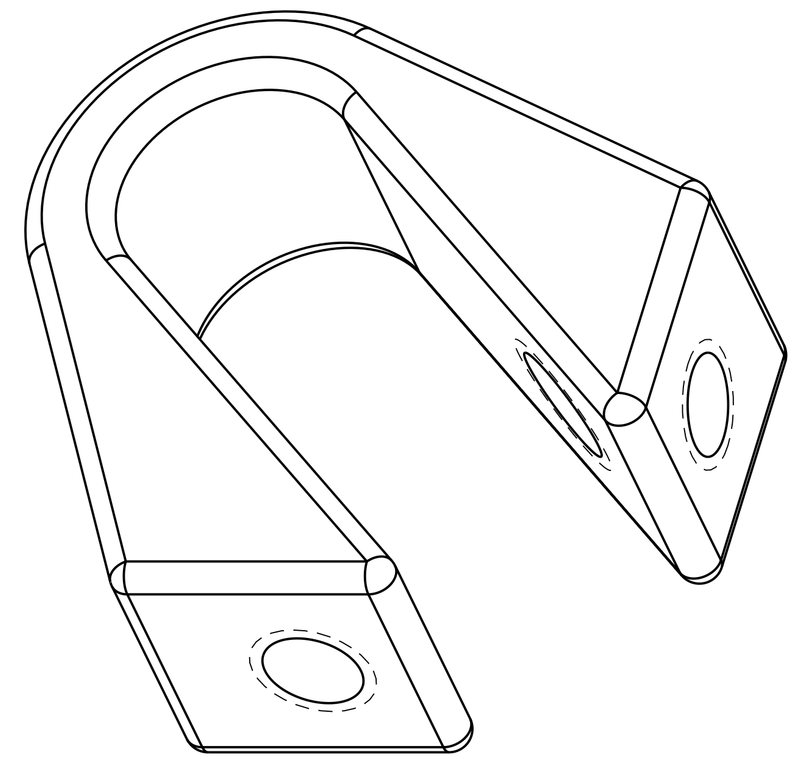

TANGENT EDGES SHOWN FOR CLARITY

1. MATERIAL: 6061-T6 ALUMINUM PER FEDERAL SPEC QQ-A-250/11.
2. CERTIFICATE OF CONFORMANCE REQUIRED FOR MATERIAL.
3. 125 Ra ALL OVER.
4. SURFACE TREATMENT PER MIL-C-5541, CLASS 3. USE IRIDITE 14.2 OR REQUESTER APPROVED EQUAL PER MIL-C-81706, CLASS 3, FORM 11, METHOD B OR C AS APPLICABLE. SPOT TOUCH UP BY METHOD B.
5. IDENTIFY BY TAGGING WITH DRAWING PART NUMBER 67212MEDH906, PER SAE AS478, METHOD 35.
6. CLEAN SURFACES WITH 190 PROOF ETHYL ALCOHOL. WIPE WITH CLEAN COTTON SWABS AND/OR LINT-FREE CLOTH.
7. HANDLE WITH CLEAN, LINT-FREE GLOVES.
8. BEFORE STORAGE, PROTECT WITH CONTAMINATION BARRIER. USE CLEAN, NEW, TRANSPARENT, POLYETHYLENE BAG FOR SMALL ITEMS, OR 4 MIL THICK MINIMUM POLYETHYLENE SHEET SEALED WITH FIBERGLASS PACKAGING TAPE. SEAL AND MARK WITH IDENTIFICATION NUMBER ON TAG ATTACHED TO BAG.
9. PROCESS PLAN REQUIRED.
10. ESTIMATED WEIGHT = 0.004 Lbs (0.002 Kgs.)

CHG	ZONE	DESCRIPTION	APP/DATE

REVISIONS

PRIOR TO USE VERIFY THE INTENDED PURPOSE IN PDM ("FOR" ATTRIBUTE)

UNLESS OTHERWISE SPECIFIED DIMENSIONS ARE IN INCHES		CONTRACT NAS3-99155	
		CONTRACTOR ANALEX CORP.	
TOLERANCE ON		TASK ORDER	4100-317
.X	±	DRAFTER	ANLX/N. SMITH
.XX	± 0.01	ENGINEER	ANLX/D. CATALANO
.XXX	± 0.005	DESIGNER	ZIN/D. ROBINSON
FRACTION	±	DIMENSIONING AND TOLERANCING PER ASME Y14.5M-1994	
ANGULAR	± 0° 30′		
BREAK EDGES	.01-.02		

PDM REL LEVEL: RELEASE PDM REVISION: x.4

PDM DATABASE: FCF

MODEL NAME: 67212MEDH906

CHECK FOR ANY OUTSTANDING ECO'S PRIOR TO USE

NATIONAL AERONAUTICS AND SPACE ADMINISTRATION
JOHN H. GLENN RESEARCH CENTER
LEWIS FIELD
CLEVELAND, OHIO

GAS CHROMATOGRAPH PACKAGE ASSEMBLY
67212MELH900

H906 GC HOLD-DOWN SCREW GUIDE BLOCK-REMOVABLE

SIZE	DRAWING NUMBER	REV	BLDG	AREA
D	67212MEDH906	-	333	-

UNITS: INCH

SCALE:	INITIAL REL DATE	SHEET	DISCIPLINE
10/1	XX/XX/XXXX	1 OF 1	MECHANICAL

PRO/E VERSION: 2000i

SIZE D DRAWING NUMBER 67212MEDH906 REV -

NAME:EDJEN OBJECT:67212MEDH906 DATE:30-Oct-00 10:45:27