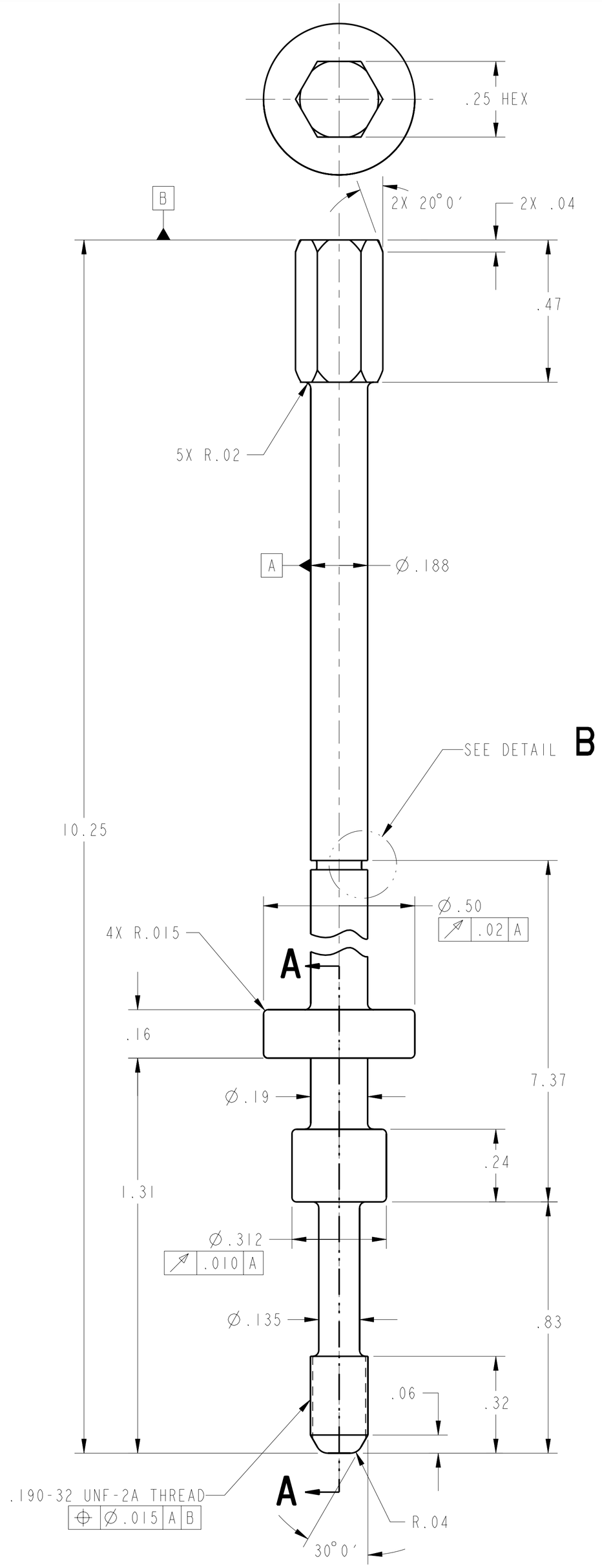

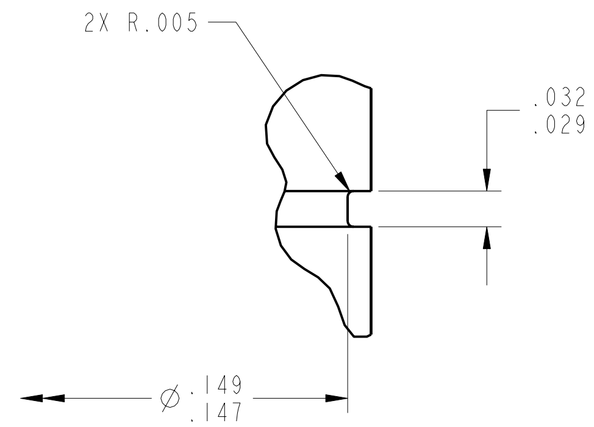

DETAIL B
SCALE: 10/1

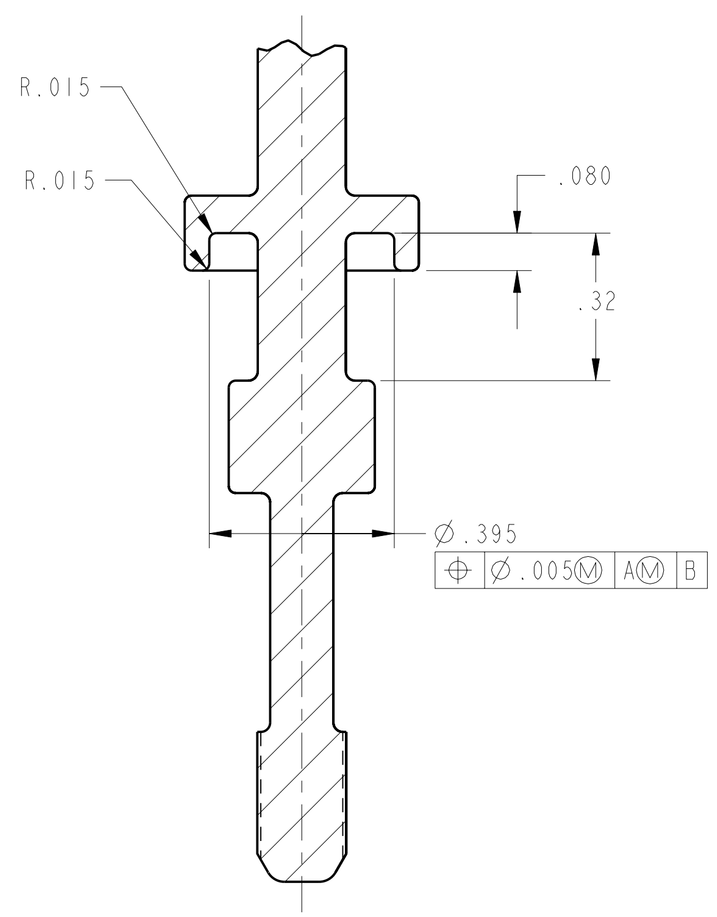

A-A

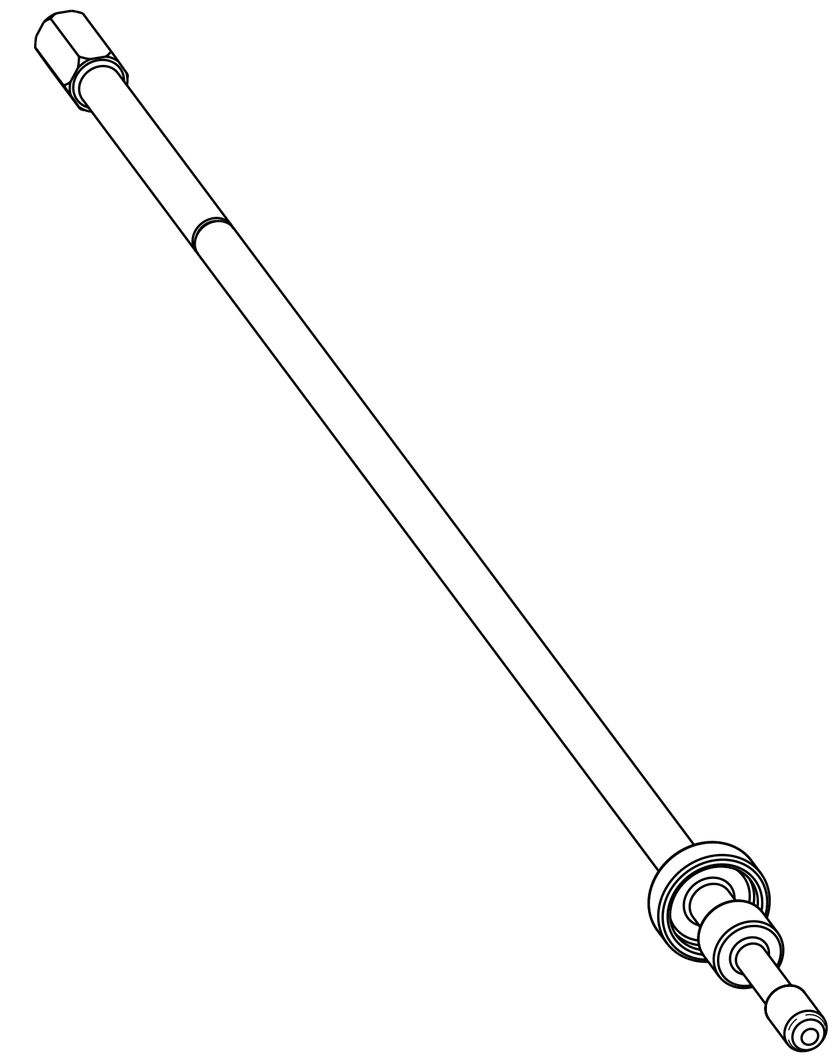

TANGENT EDGES SHOWN FOR CLARITY
SCALE: 2/1

1. MATERIAL: 303 STAINLESS STEEL PER QQ-S-764.
2. CERTIFICATE OF CONFORMANCE REQUIRED FOR MATERIAL.
3. 64 Ra ALL OVER.
4. IDENTIFY BY TAGGING WITH DRAWING PART NUMBER 67212MEDH905, PER SAE AS478, METHOD 35.
5. CLEAN AND PASSIVATE PER MIL-S-5002, PARAGRAPHS 3.4.2.4 AND 3.4.2.4.1 AND FEDERAL SPECIFICATION QQ-P-35.
6. CLEAN SURFACES WITH 190 PROOF ETHYL ALCOHOL. WIPE WITH CLEAN COTTON SWABS AND/OR LINT-FREE CLOTH.
7. HANDLE WITH CLEAN, LINT-FREE GLOVES.
8. BEFORE STORAGE, PROTECT WITH CONTAMINATION BARRIER. USE CLEAN, NEW, TRANSPARENT, POLYETHYLENE BAG FOR SMALL ITEMS, OR 4 MIL THICK MINIMUM POLYETHYLENE SHEET SEALED WITH FIBERGLASS PACKAGING TAPE. SEAL AND MARK WITH IDENTIFICATION NUMBER ON TAG ATTACHED TO BAG.
9. PROCESS PLAN REQUIRED.
10. ESTIMATED WEIGHT = 0.031 Lbs (0.014 Kgs.)

CHG	ZONE	DESCRIPTION	APP/DATE

REVISIONS

PRIOR TO USE VERIFY THE INTENDED PURPOSE IN PDM ("FOR" ATTRIBUTE)

UNLESS OTHERWISE SPECIFIED DIMENSIONS ARE IN INCHES

CONTRACT NAS3-99155
CONTRACTOR ANALEX CORP.
TASK ORDER 4100-317

TOLERANCE ON			
.X	± 0.03	DRAFTER	ANLX/N. SMITH
.XX	± 0.01	ENGINEER	ANLX/D. CATALANO
.XXX	± 0.005	DESIGNER	ZIN/D. ROBINSON
FRACTION	±	DIMENSIONING AND TOLERANCING PER ASME Y14.5M-1994	
ANGULAR	± 0° 30′		
BREAK EDGES	.01-.02		

NATIONAL AERONAUTICS AND SPACE ADMINISTRATION
JOHN H. GLENN RESEARCH CENTER
LEWIS FIELD
CLEVELAND, OHIO

GAS CHROMATOGRAPH PACKAGE ASSEMBLY
67212MELH900

H905 GC HOLD-DOWN SCREW .190-32

PDM REL LEVEL: RELEASE PDM REVISION: x.5
PDM DATABASE: FCF
MODEL NAME: 67212MEDH905
CHECK FOR ANY OUTSTANDING ECO'S PRIOR TO USE

SIZE	DRAWING NUMBER	REV	BLDG	AREA
D	67212MEDH905	-	333	-
			UNITS: INCH	
SCALE: 4/1 AND NOTED	INITIAL REL DATE XX/XX/XXXX	SHEET 1 OF 1	DISCIPLINE MECHANICAL	

PRO/E VERSION: 2001

SIZE D DRAWING NUMBER 67212MEDH905 REV -

NUMEGEN4 OBJECT:67212MEDH905 DATE:30-Oct-00 10:45:03