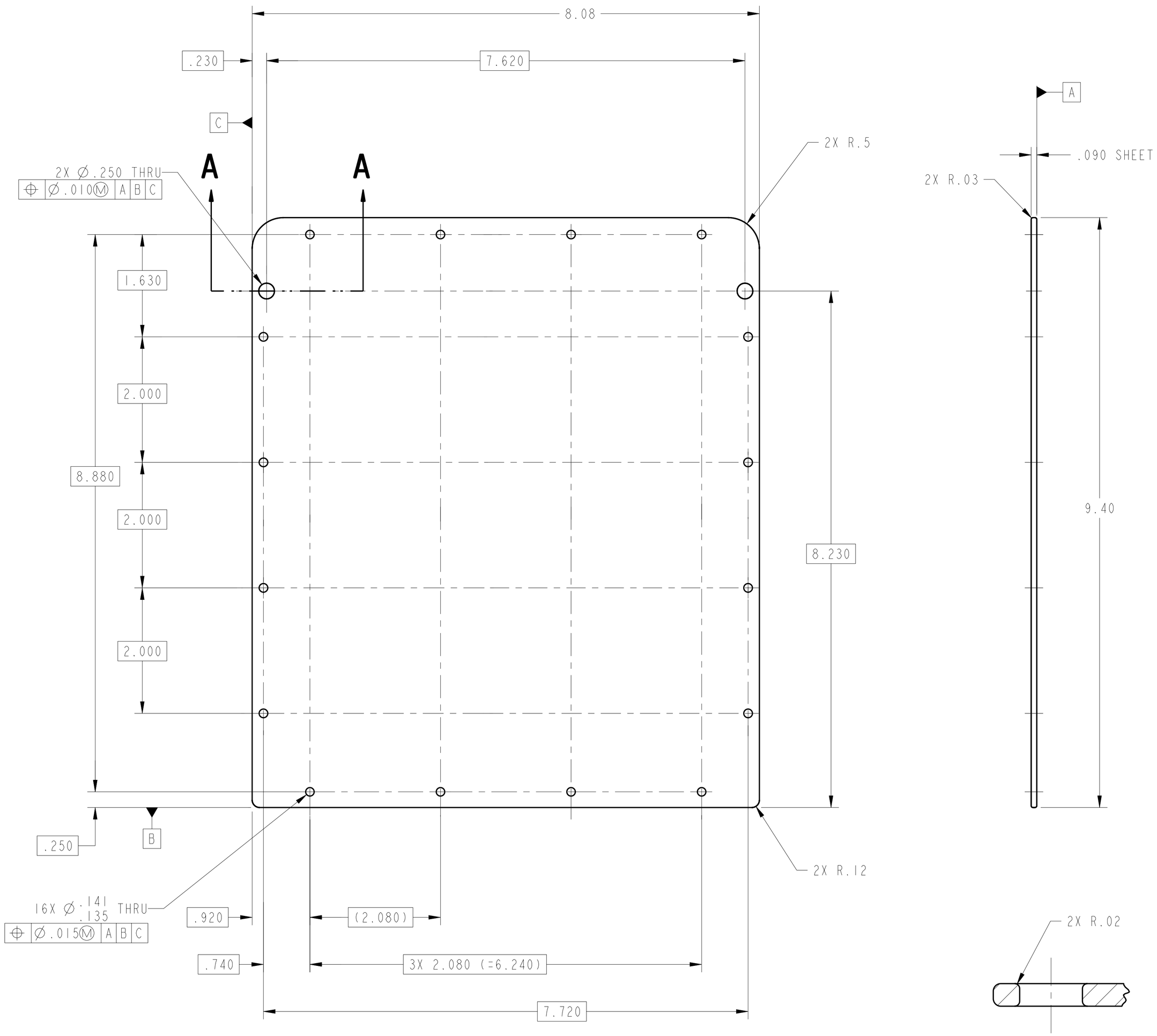

A-A
2 PLACES
SCALE: 4/1

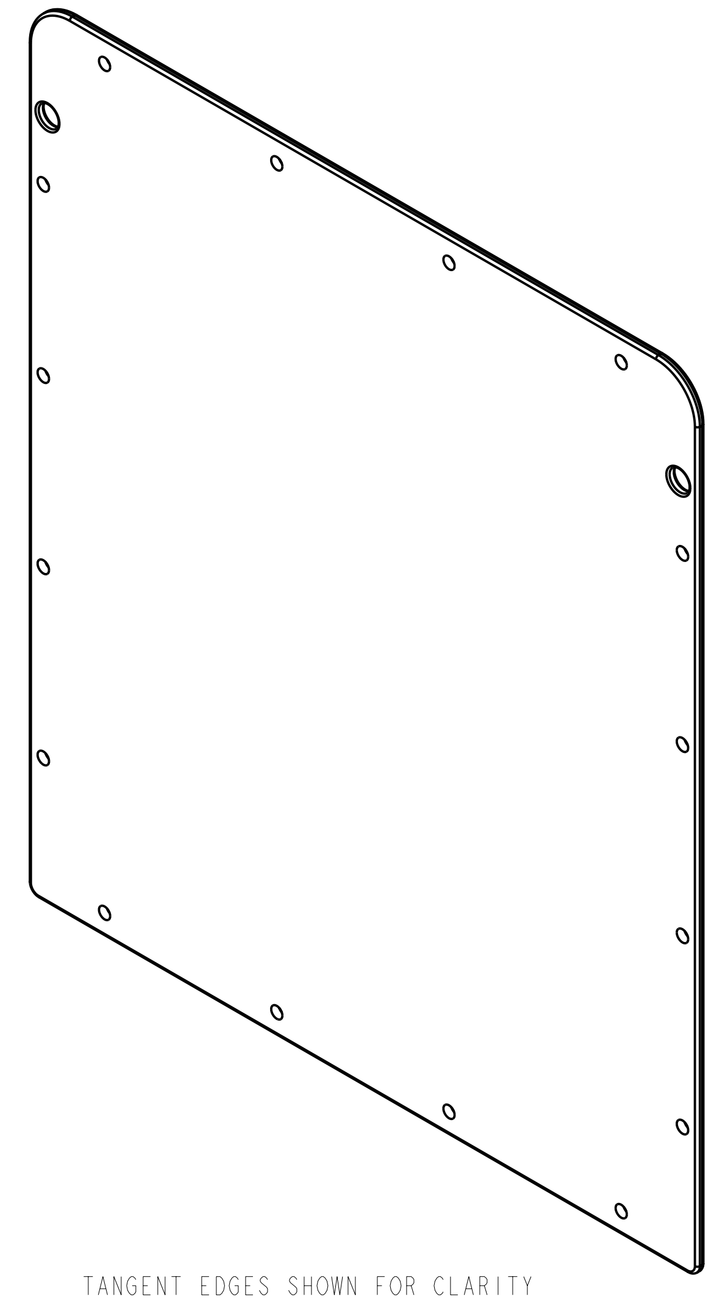

TANGENT EDGES SHOWN FOR CLARITY

1. MATERIAL: 6061-T6 ALUMINUM PER FEDERAL SPEC QQ-A-250/11.
2. CERTIFICATE OF CONFORMANCE REQUIRED FOR MATERIAL.
3. 125 Ra ALL MACHINED SURFACES.
4. SURFACE TREATMENT PER MIL-C-5541, CLASS 3. USE IRIDITE 14.2 OR REQUESTER APPROVED EQUAL PER MIL-C-81706, CLASS 3, FORM 11, METHOD B OR C AS APPLICABLE. SPOT TOUCH UP BY METHOD B.
5. PAINT ALL SURFACES EXCEPT HOLES WITH ONE COAT OF 03W187 SEMI-GLOSS OFF WHITE FEDERAL STANDARD COLOR 27722 WITH 03W187CAT, PER MANUFACTURER'S SPECIFICATION TT-P-2756. CURE FOR 72 HOURS AT 160°F. MANUFACTURER: DEFT INCORPORATED.
6. IDENTIFY BY TAGGING WITH DRAWING PART NUMBER 67212MEDH902, PER SAE AS478, METHOD 35.
7. CLEAN SURFACES WITH 190 PROOF ETHYL ALCOHOL. WIPE WITH CLEAN COTTON SWABS AND/OR LINT-FREE CLOTH.
8. HANDLE WITH CLEAN, LINT-FREE GLOVES.
9. BEFORE STORAGE, PROTECT WITH CONTAMINATION BARRIER. USE CLEAN, NEW, TRANSPARENT, POLYETHYLENE BAG FOR SMALL ITEMS, OR 4 MIL THICK MINIMUM POLYETHYLENE SHEET SEALED WITH FIBERGLASS PACKAGING TAPE. SEAL AND MARK WITH IDENTIFICATION NUMBER ON TAG ATTACHED TO BAG.
10. PROCESS PLAN REQUIRED.
11. ESTIMATED WEIGHT = 0.665 Lbs (0.302 Kgs.)

CHG	ZONE	DESCRIPTION	APP/DATE

REVISIONS

PRIOR TO USE VERIFY THE INTENDED PURPOSE IN PDM ("FOR" ATTRIBUTE)

UNLESS OTHERWISE SPECIFIED DIMENSIONS ARE IN INCHES

CONTRACT NAS3-99155
CONTRACTOR ANALEX CORP.

TOLERANCE ON		TASK ORDER	4100-317
.X	± 0.03	DRAFTER	ANLX/N. SMITH
.XX	± 0.01	ENGINEER	ANLX/D. CATALANO
.XXX	± 0.005	DESIGNER	ZIN/D. ROBINSON
FRACTION	±	DIMENSIONING AND TOLERANCING PER ASME Y14.5M-1994	
ANGULAR	±		
BREAK EDGES	.01-.02		

PDM REL LEVEL: RELEASE PDM REVISION: x.7
PDM DATABASE: FCF
MODEL NAME: 67212MEDH902
CHECK FOR ANY OUTSTANDING ECO'S PRIOR TO USE

NATIONAL AERONAUTICS AND SPACE ADMINISTRATION
JOHN H. GLENN RESEARCH CENTER
LEWIS FIELD
CLEVELAND, OHIO

GAS CHROMATOGRAPH PACKAGE ASSEMBLY
67212MELH900

H902 GC COVER PLATE-FRONT

SIZE	DRAWING NUMBER	REV	BLDG	AREA
D	67212MEDH902	-	333	-

UNITS: INCH

SCALE:	INITIAL REL DATE	SHEET	DISCIPLINE
1/1 AND NOTED	XX/XX/XXXX	1 OF 1	MECHANICAL

PRO/E VERSION: 2000i

SIZE D DRAWING NUMBER 67212MEDH902 REV -