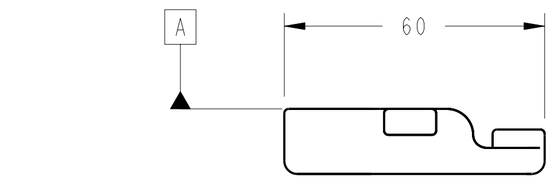

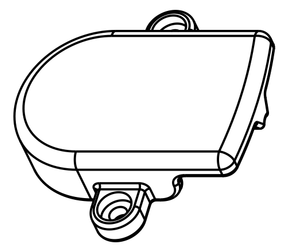

ISO VIEW I
TANGENT LINES SHOWN
SCALE 1:1

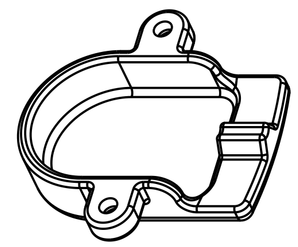

ISO VIEW II
TANGENT LINES SHOWN
SCALE 1:1

1. MATERIAL:
   ALUMINUM 6061-T6 PER QQ-A-250/11.
2. 3.2 Ra ALL INSIDE MACHINED SURFACES, 5 Ra ALL OUTSIDE MACHINED SURFACES UNLESS OTHERWISE SPECIFIED.
3. ALL FILLET RADII TO BE 6 mm UNLESS OTHERWISE SPECIFIED.
4. ROUGH MACHINED AND FINISHED PART MUST PASS DYE PENETRANT INSPECTION PER ASTM E1417. ACCEPTANCE PER MIL-STD-1907.
5. ELECTROCHEMICAL ETCH DRAWING PART NUMBER 67212MEDH258 ON SPECIFIED SURFACE PER SAE AS478, METHOD 7A. (ZONE B/C5)
6. HARD FLAT BLACK ANODIZE INTERIOR AND EXTERIOR SURFACES PER MIL-A-8625, TYPE III, CLASS 2.
7. CLEAN SURFACES WITH 190 PROOF ETHYL ALCOHOL. WIPE WITH CLEAN COTTON SWABS AND/OR LINT-FREE CLOTH.
8. HANDLE WITH CLEAN, LINT-FREE GLOVES.
9. BEFORE STORAGE, PROTECT WITH CONTAMINATION BARRIER. USE CLEAN, NEW TRANSPARENT, POLYETHYLENE BAG FOR SMALL ITEMS, OR 4 MIL THICK MINIMUM POLYETHYLENE SHEET SEALED WITH FIBERGLASS PACKAGING TAPE. SEAL AND MARK WITH IDENTIFICATION NUMBER ON TAG ATTACHED TO BAG.
10. PROCESS PLAN REQUIRED.
11. ESTIMATED WEIGHT: 0.035 Kg.

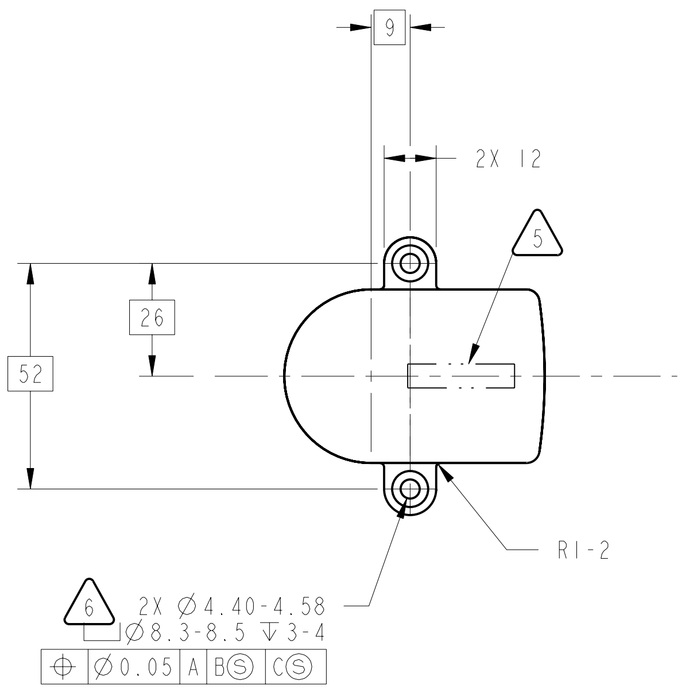

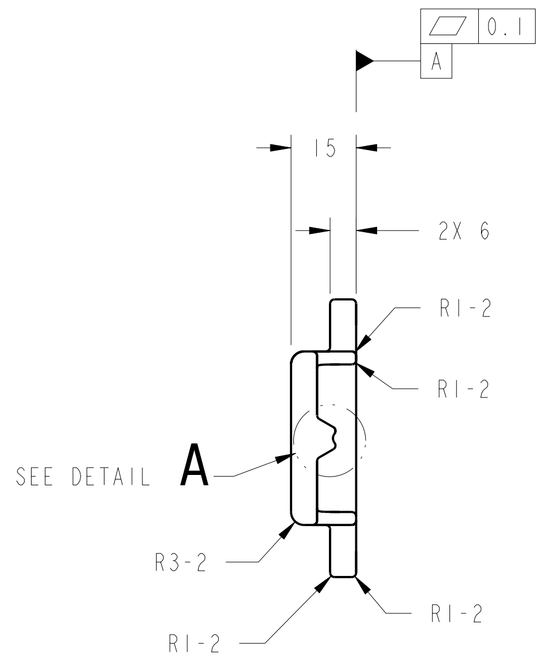

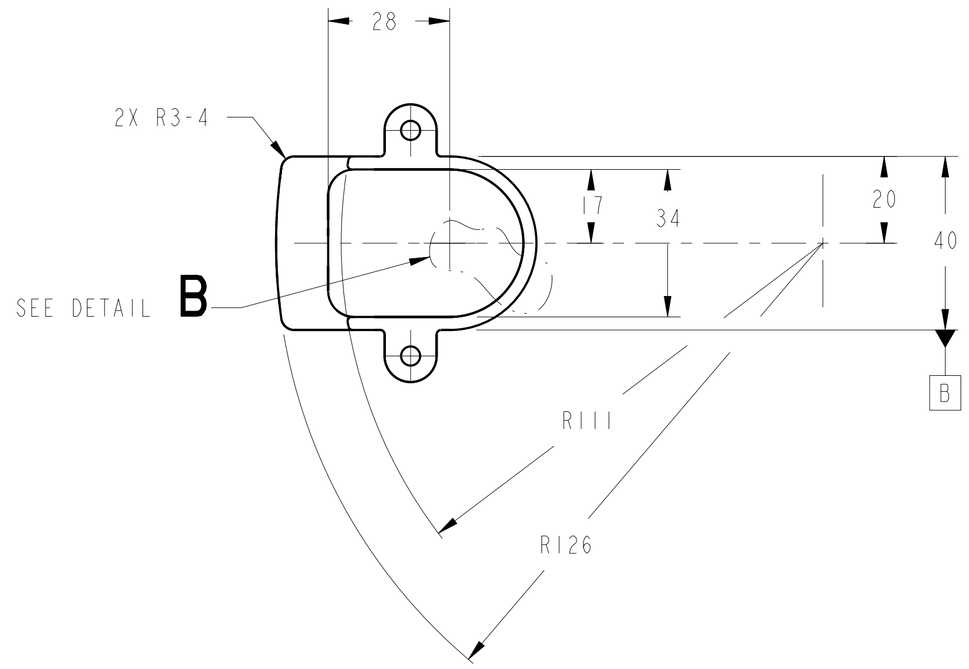

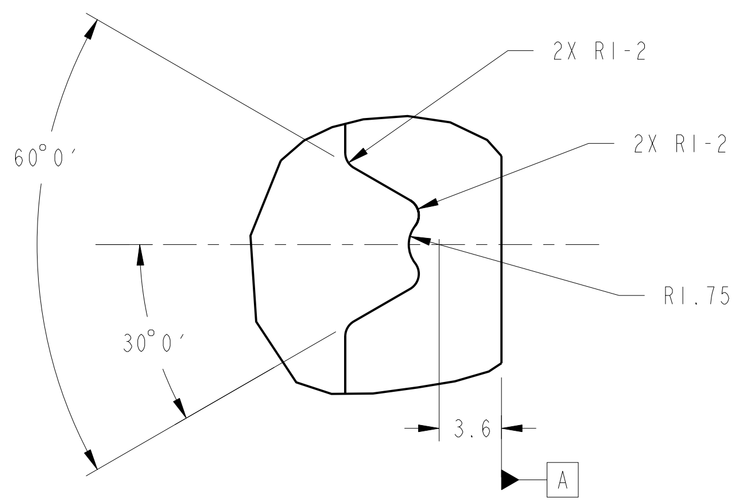

DETAIL A
SCALE 4:1

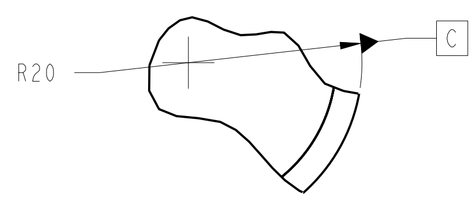

DETAIL B
SCALE 2:1

CHG	ZONE	DESCRIPTION	APP/DATE

REVISIONS

UNLESS OTHERWISE SPECIFIED:
1. ALL DIMENSIONING AND TOLERANCING PER ASME Y14.5M-1994
2. ALL DIMENSIONS ARE IN MILLIMETERS
3. BREAK EDGES: 0.2-0.5
4. LINEAR TOLERANCES:
   0.5-6 ±0.1
   OVER 6-30 ±0.2
   OVER 30-120 ±0.3
   OVER 120-315 ±0.5
   OVER 315-1000 ±0.8
   OVER 1000-2000 ±1.2
5. ANGULAR TOLERANCES: 0° 30′

CONTRACT	NAS3-27600
CONTRACTOR	ADF, INC.
TASK ORDER	60
DRAFTER	ADF/ M. AYNIK
ENGINEER	ANLX/ M. POLITI
DESIGNER	ADF/ M. AYNIK

THIRD ANGLE PROJECTION

NATIONAL AERONAUTICS AND SPACE ADMINISTRATION
JOHN H. GLENN RESEARCH CENTER
LEWIS FIELD
CLEVELAND, OHIO

TEST CHAMBER MODULE ASSEMBLY

67212MELH200

258 FAN WIRE STRAIN RELIEF

PDM REL LEVEL: PDM REVISION:
PDM DATABASE:
MODEL NAME: 67212MEDH258
PRIOR TO USE VERIFY THE INTENDED PURPOSE IN PDM ("FOR" ATTRIBUTE)

SIZE	DRAWING NUMBER	REV	BLDG	AREA
A1	67212MEDH258	-	333	-
			UNITS: mm	

SCALE:	INITIAL REL DATE	SHEET	DISCIPLINE
1:1 AND NOTED	XX/XX/XXXX	1 OF 1	MECHANICAL

PRO/E VERSION: 20.0

REV -
SIZE A1 DRAWING NUMBER 67212MEDH258

NAME:EDJEN OBJECT:67212MEDH258 DATE:30-Oct-00 10:42:54