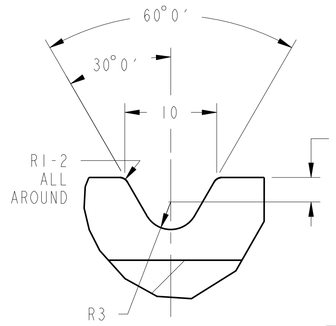

DETAIL B
SCALE 3:1

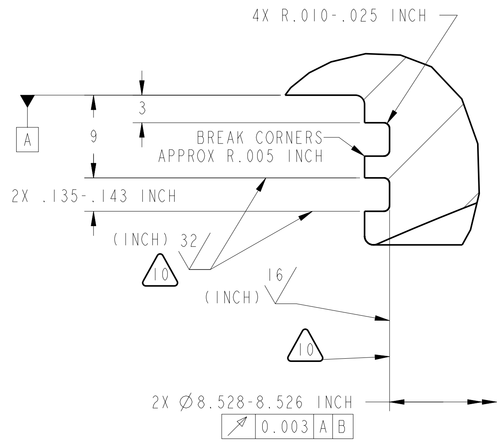

DETAIL C
SCALE 3:1

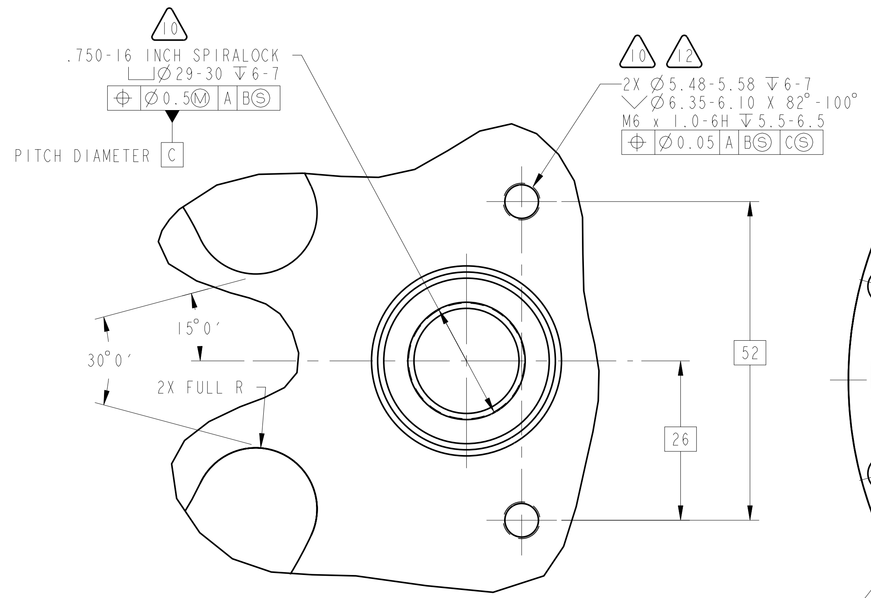

DETAIL D
SCALE 2:1

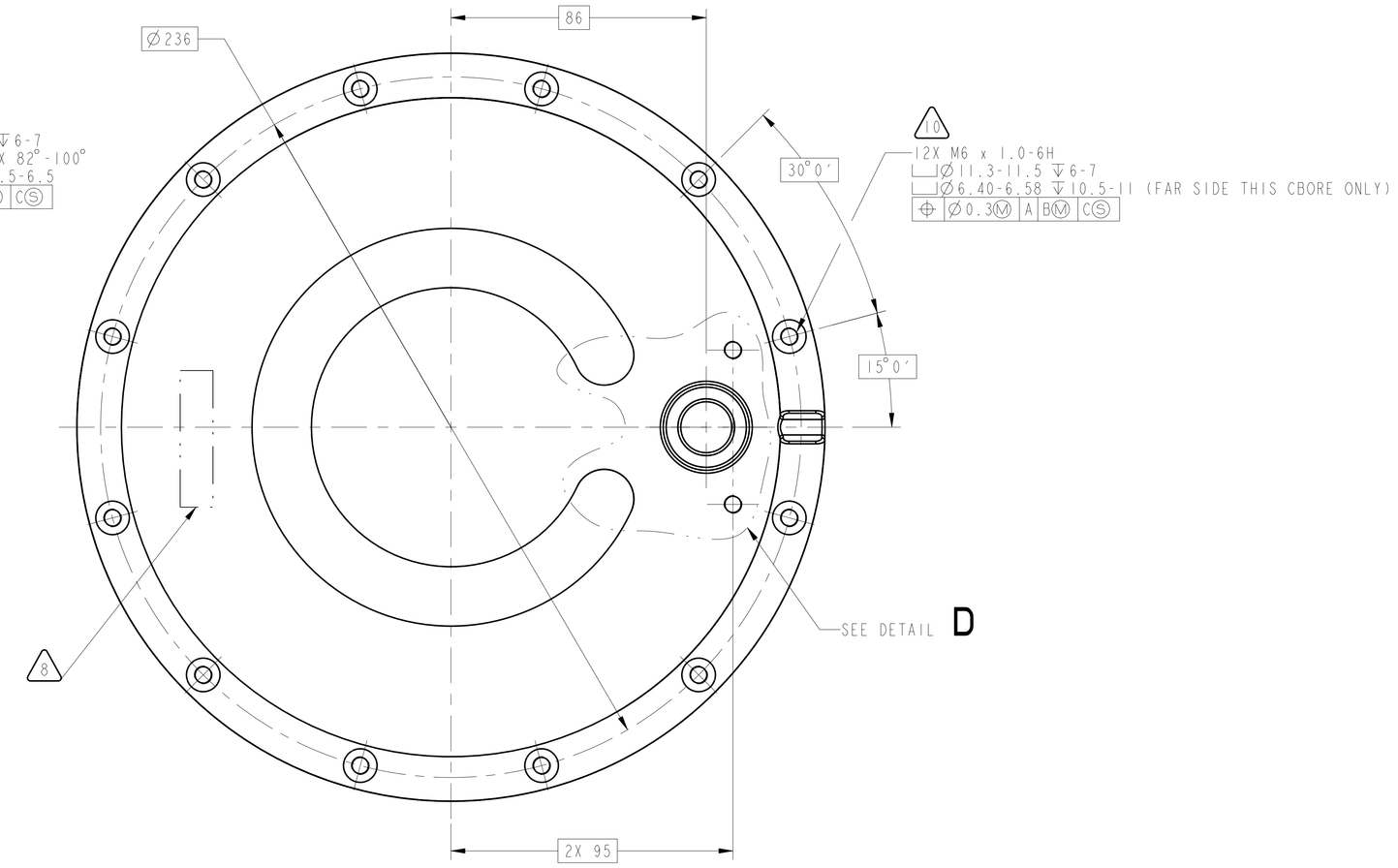

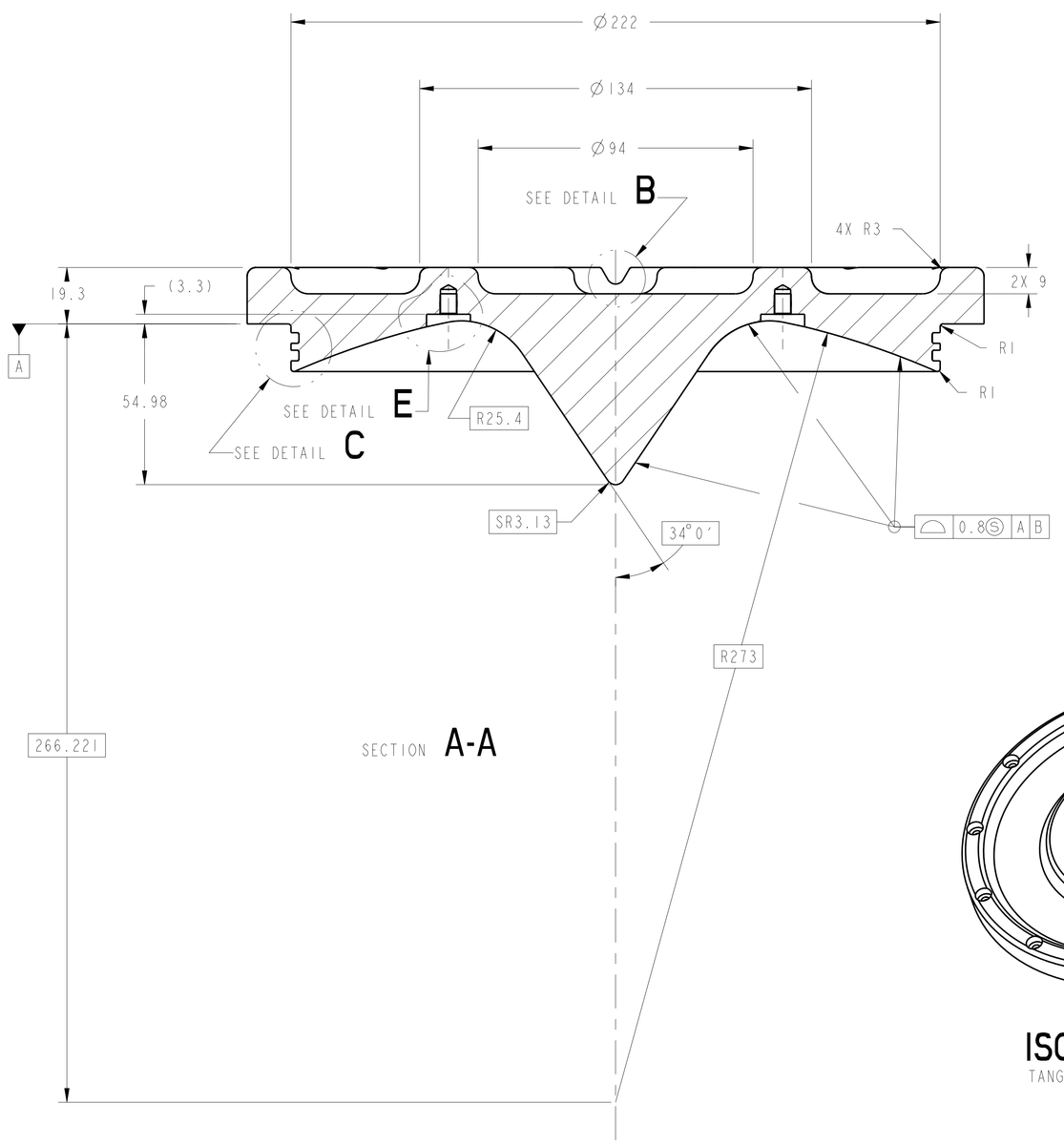

SECTION A-A

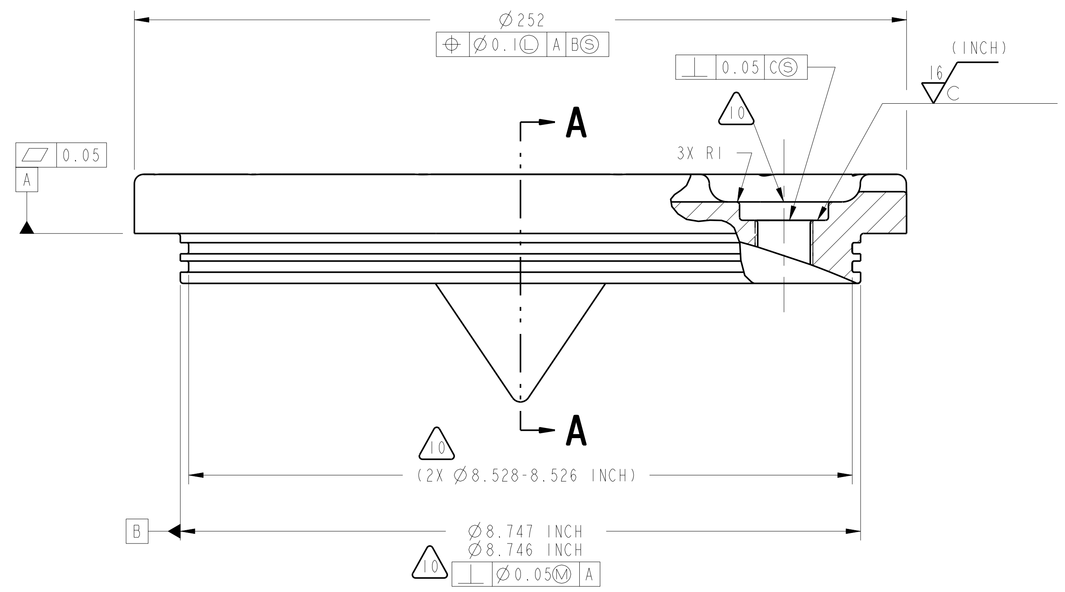

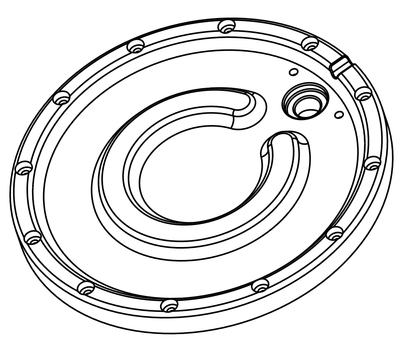

ISO VIEW I
TANGENT LINES SHOWN
SCALE 1:2

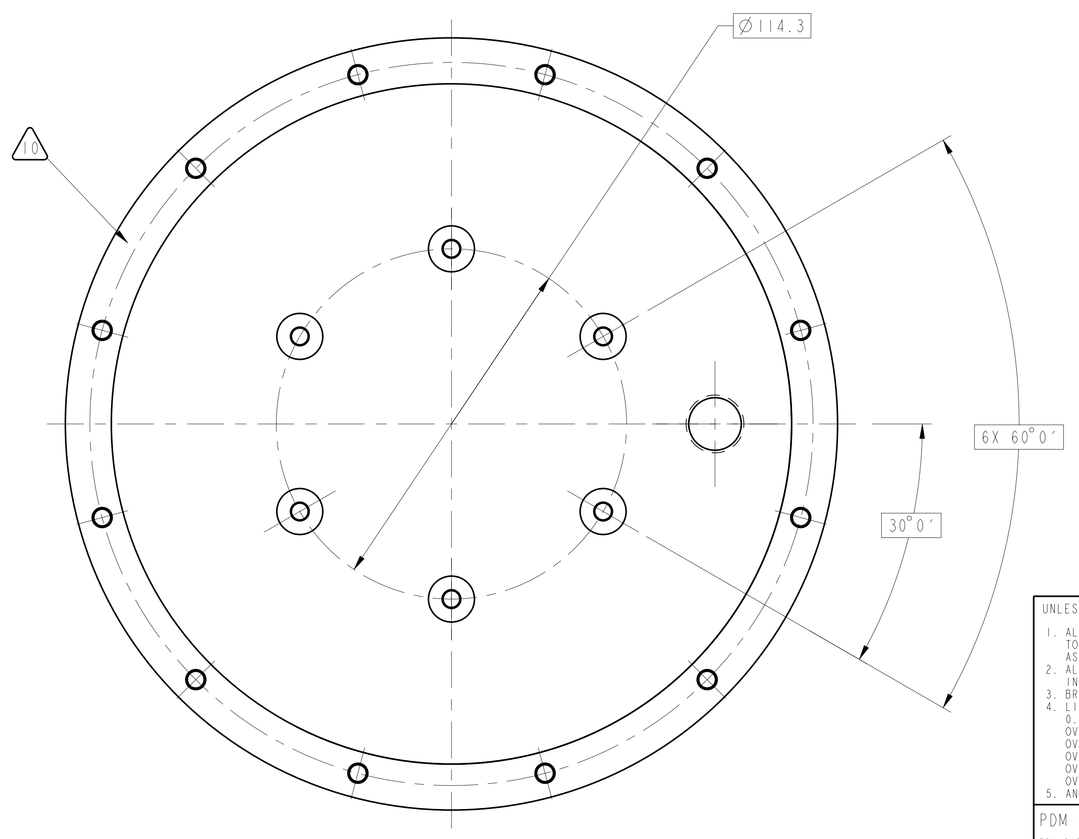

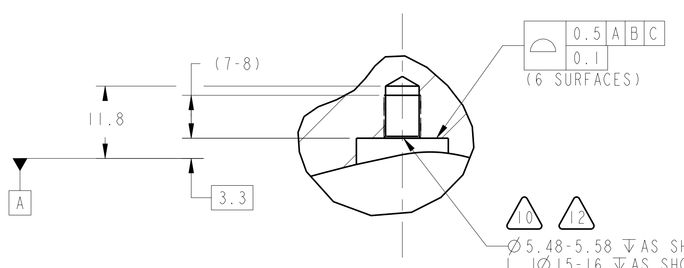

DETAIL E
6 PLACES
SCALE 2:1

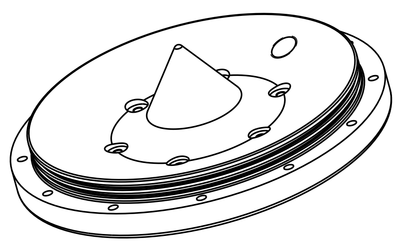

ISO VIEW II
TANGENT LINES SHOWN
SCALE 1:2

1. THIS ITEM IS FRACTURE CRITICAL
2. MATERIAL:
   ALUMINUM 7075-T73 PER QQ-A-250/12.
3. CERTIFICATION OF CHEMICAL AND MECHANICAL PROPERTIES REQUIRED
4. ULTRASONIC INSPECT PER MIL-STD-2154, TYPE I, QUALITY LEVEL CLASS A, PRIOR TO FABRICATION. ACCEPTANCE CRITERIA PER SECTION 5.5.4 AND TABLE VI.
5. 3.2 Ra ALL INSIDE MACHINED SURFACES, 5 Ra ALL OUTSIDE MACHINED SURFACES UNLESS OTHERWISE SPECIFIED.
6. ALL FILLET RADII TO BE 6 mm UNLESS OTHERWISE SPECIFIED.
7. FINISHED PART MUST PASS DYE PENETRANT INSPECTION PER ASTM E1417. ACCEPTANCE PER MIL-STD-1907.
8. ELECTROCHEMICAL ETCH DRAWING PART NUMBER 67212MEDH257 ON SPECIFIED SURFACE PER SAE AS478, METHOD 7A. (ZONE G6)
9. SURFACE TREAT ENTIRE PART PER MIL-C-5541 USE IRIDITE 14.2 OR APPROVED EQUIVALENT PER MIL-C-81706, CLASS 3, FORM II, METHOD B OR C AS APPLICABLE. SPOT TOUCH UP BY METHOD B. PERFORM BEFORE INSTALLING KEENSERTS
10. DO NOT ANODIZE ANY TAPPED, BLIND, OR THRU HOLES, COUNTERBORES OR SURFACES INDICATED.
11. HARD FLAT BLACK ANODIZE INTERIOR AND EXTERIOR SURFACES PER MIL-A-8625, TYPE III, CLASS 2. PERFORM BEFORE INSTALLING KEENSERTS.
12. INSTALL KEENSERT KNCML 4X0.7 PER MANUFACTURER'S SPECIFICATIONS AFTER SURFACE TREATMENT PER NOTES 11 & 12.
13. CLEAN SURFACES WITH 190 PROOF ETHYL ALCOHOL. WIPE WITH CLEAN COTTON SWABS AND/OR LINT-FREE CLOTH.
14. HANDLE WITH CLEAN, LINT-FREE GLOVES.
15. BEFORE STORAGE, PROTECT WITH CONTAMINATION BARRIER. USE CLEAN, NEW TRANSPARENT, POLYETHYLENE BAG FOR SMALL ITEMS, OR 4 MIL THICK MINIMUM POLYETHYLENE SHEET SEALED WITH FIBERGLASS PACKAGING TAPE. SEAL AND MARK WITH IDENTIFICATION NUMBER ON TAG ATTACHED TO BAG.
16. LAST DATUM USED: -C-.
17. LAST SECTION OR VIEW LETTER USED: E.
18. PROCESS PLAN REQUIRED.
19. ESTIMATED WEIGHT: 2.602 Kg.

CHG	ZONE	DESCRIPTION	APP/DATE
A	H3&4	ADDED CBORE TO FACE SIDE OF RING; CHANGED ERRONEOUS Ø6.35-6.10 X 82°-100° TO Ø6.40-6.58 ↧10.5-11 (FAR SIDE THIS CBORE ONLY)	MJA 02/29/00

REVISIONS

UNLESS OTHERWISE SPECIFIED:
1. ALL DIMENSIONING AND TOLERANCING PER ASME Y14.5M-1994
2. ALL DIMENSIONS ARE IN MILLIMETERS
3. BREAK EDGES: 0.2-0.5
4. LINEAR TOLERANCES:
   0.5-6 ±0.1
   OVER 6-30 ±0.2
   OVER 30-120 ±0.3
   OVER 120-315 ±0.5
   OVER 315-1000 ±0.8
   OVER 1000-2000 ±1.2
5. ANGULAR TOLERANCES: 0° 30′

THIRD ANGLE PROJECTION

CONTRACT	NAS3-27600
CONTRACTOR	ADF, INC.
TASK ORDER	60
DRAFTER	ADF/N.MCMASTER
ENGINEER	ANLX/M. POLITI
DESIGNER	ADF/D. ROBINSON

NATIONAL AERONAUTICS AND SPACE ADMINISTRATION
JOHN H. GLENN RESEARCH CENTER
LEWIS FIELD
CLEVELAND, OHIO

TEST CHAMBER MODULE ASSEMBLY

67212MELH200

257 END CAP CENTER PLUG

PDM REL LEVEL: RELEASE PDM REVISION: x.8
PDM DATABASE: FCF
MODEL NAME: 67212MEDH257
PRIOR TO USE VERIFY THE INTENDED PURPOSE IN PDM ("FOR" ATTRIBUTE)

SIZE	DRAWING NUMBER	REV	BLDG	AREA
A0	67212MEDH257	-	333	-
			UNITS: mm	
SCALE: 1:1	INITIAL REL DATE XX/XX/XX	SHEET 1 OF 1	DISCIPLINE MECHANICAL	

PRO/E VERSION: 19

67212MEDH257
A0

NAME:CDJKM OBJECT:67212MEDH257 DATE:30-04-00 10:42:26