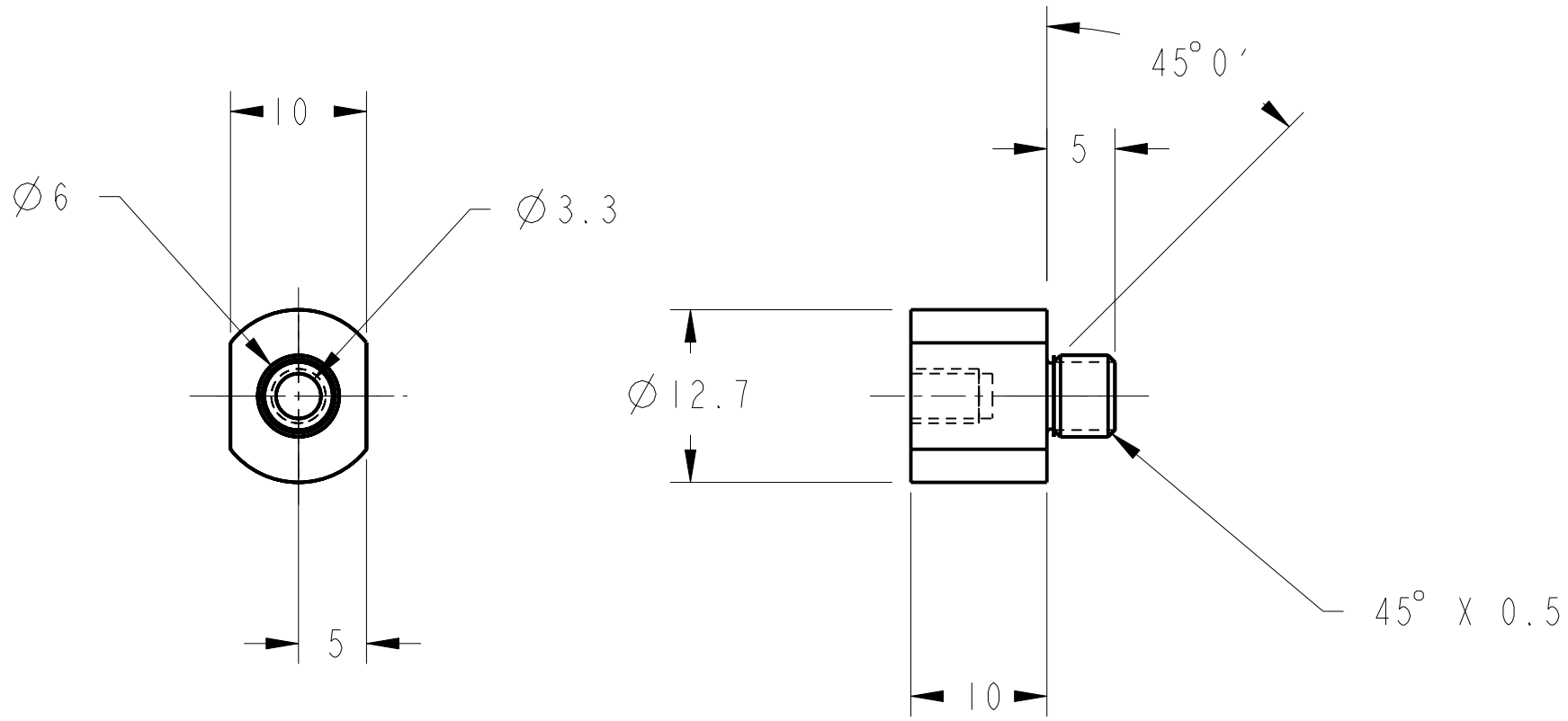


1. MATERIAL: 304 STAINLESS STEEL PER FEDERAL SPEC QQ-S-763.
2. CERTIFICATE OF CONFORMANCE REQUIRED FOR MATERIAL.
3. 1.6 Ra ALL MACHINED SURFACES PER ANSI/ASME B46.1.
4. CLEAN AND PASSIVATE PER MIL-S-5002, PARAGRAPHS 3.4.2.4 AND 3.4.2.4.1 AND FEDERAL SPECIFICATION QQ-P-35.
5. BEFORE STORAGE, PROTECT WITH CONTAMINATION BARRIER. USE CLEAN, NEW, TRANSPARENT, POLYETHYLENE BAG FOR SMALL ITEMS, OR 4 MIL THICK MINIMUM POLYETHYLENE SHEET SEALED WITH FIBERGLASS PACKAGING TAPE. SEAL AND MARK WITH IDENTIFICATION NUMBER ON TAG ATTACHED TO BAG.
6. PROCESS PLAN REQUIRED.
7. ESTIMATED WEIGHT=&MASS Kg.

| CHG | ZONE | DESCRIPTION | APP/DATE |
|---|---|---|---|

REVISIONS

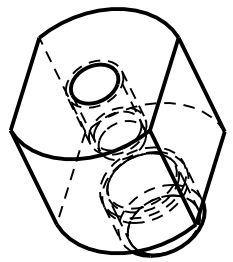

UNLESS OTHERWISE SPECIFIED:

1. ALL DIMENSIONING AND TOLERANCING PER ASME Y14.5M-1994
2. ALL DIMENSIONS ARE IN MILLIMETERS
3. BREAK EDGES: 0.2-0.5
4. LINEAR TOLERANCES:
   - 0.5-6 ±0.1
   - OVER 6-30 ±0.2
   - OVER 30- 120 ±0.3
   - OVER 120-315 ±0.5
   - OVER 315-1000 ±0.8
   - OVER 1000-2000 ±1.2
5. ANGULAR TOLERANCES: 0° 30′

| | |
|---|---|
| CONTRACT | NAS3-27600 |
| CONTRACTOR | ADF, INC. |
| TASK ORDER | 60 |
| DRAFTER | ADF/ J. IMBURGIA |
| ENGINEER | ANLX/ M. POLITI |
| DESIGNER | ADF/ J. IMBURGIA |

THIRD ANGLE PROJECTION

NATIONAL AERONAUTICS AND SPACE ADMINISTRATION
JOHN H. GLENN RESEARCH CENTER
LEWIS FIELD
CLEVELAND, OHIO

AFT END CAP ASSEMBLY

67212MEDH250

256 FAN SHROUD STANDOFF

PDM REL LEVEL: PDM REVISION:

PDM DATABASE: FCF
MODEL NAME: FAN_STANDOFF

PRIOR TO USE VERIFY THE INTENDED PURPOSE IN PDM ("FOR" ATTRIBUTE)

| SIZE | DRAWING NUMBER | REV | BLDG | AREA |
|---|---|---|---|---|
| A3 | 67212MEDH256 | - | 333 | - |
| | | | UNITS: mm | |
| SCALE: 2:1 | INITIAL REL DATE 08/XX/1999 | SHEET 1 OF 1 | DISCIPLINE MECHANICAL | |

PRO/E VERSION: 20.0

SIZE A3 DRAWING NUMBER 67212MEDH256 REV -

NAME:EDJEN OBJECT:67212MEDH256 DATE:30-Oct-00 10:41:59