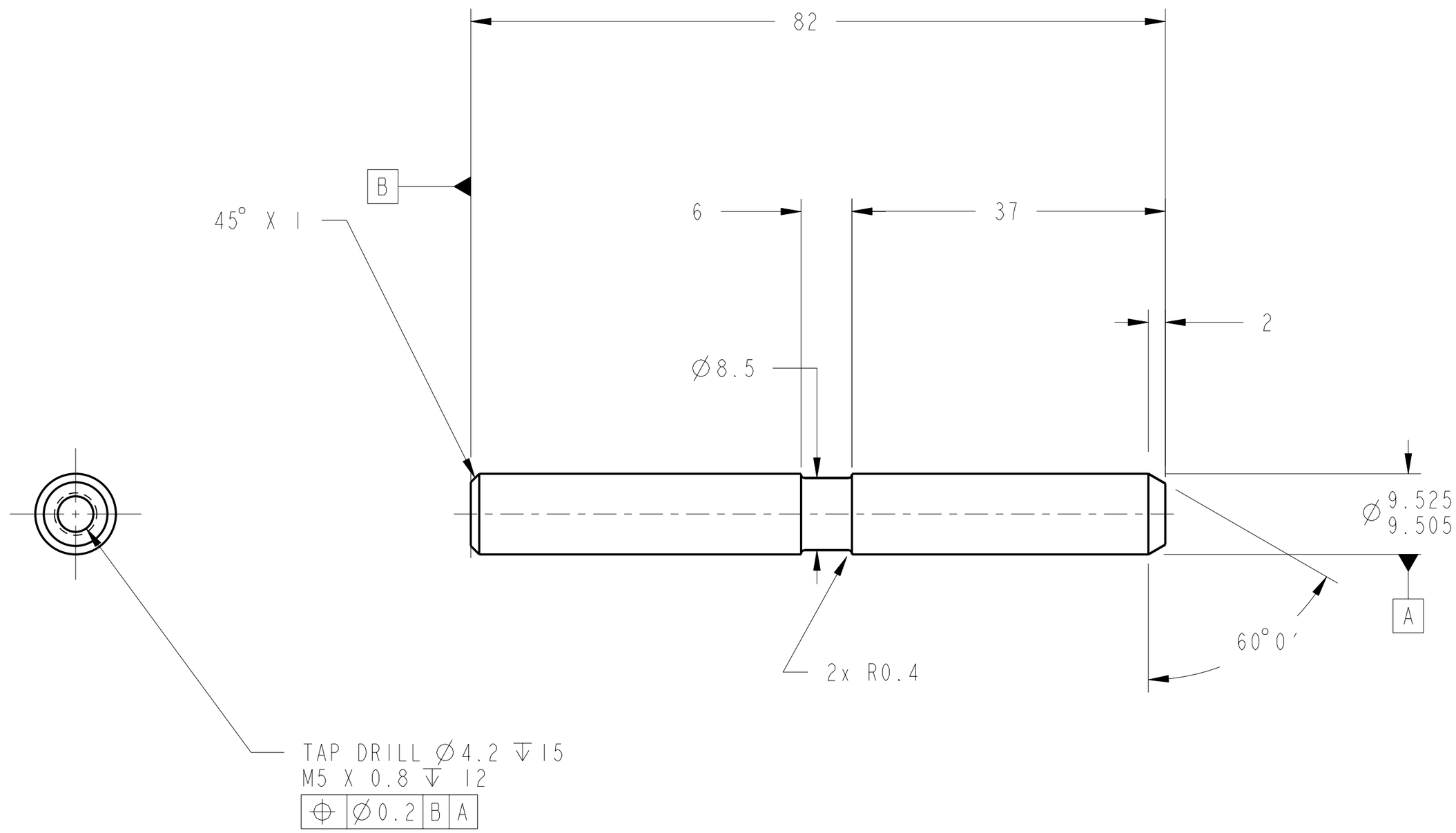

1. MATERIAL: 304 STAINLESS STEEL PER FEDERAL SPEC QQ-S-763.
2. CERTIFICATE OF CONFORMANCE REQUIRED FOR MATERIAL.
3. ULTRASONIC INSPECT PER MIL-STD-2154, PRIOR TO FABRICATION. ACCEPTANCE PER SECTION 5.5.4., TABLE VI, CLASS LEVEL A.
4. FINISHED PART MUST PASS DYE PENETRANT INSPECTION PER ASME E1417. ACCEPTANCE PER MIL-STD-1907.
5. 1.6 Ra ALL MACHINED SURFACES PER ANSI/ASME B46.
6. CLEAN AND PASSIVATE PER MIL-S-5002, PARAGRAPHS 3.4.2.4 AND 3.4.2.4.1 AND FEDERAL SPECIFICATION QQ-P-35.
7. CLEAN SURFACES WITH 190 PROOF ETHYL ALCOHOL. WIPE WITH CLEAN COTTON SWABS AND/OR LINT-FREE CLOTH.
8. BEFORE STORAGE, PROTECT WITH CONTAMINATION BARRIER. USE CLEAN, NEW, TRANSPARENT, POLYETHYLENE BAG FOR SMALL ITEMS, OR 4 MIL THICK MINIMUM POLYETHYLENE SHEET SEALED WITH FIBERGLASS PACKAGING TAPE. SEAL AND MARK WITH IDENTIFICATION NUMBER ON TAG ATTACHED TO BAG.
9. PROCESS PLAN REQUIRED.
10. ESTIMATED WEIGHT=&MASS Kg.

CHG	ZONE	DESCRIPTION	APP/DATE

REVISIONS

UNLESS OTHERWISE SPECIFIED:

1. ALL DIMENSIONING AND TOLERANCING PER ASME Y14.5M-1994
2. ALL DIMENSIONS ARE IN MILLIMETERS
3. BREAK EDGES: 0.2-0.5
4. LINEAR TOLERANCES:
   - 0.5-6 ±0.1
   - OVER 6-30 ±0.2
   - OVER 30- 120 ±0.3
   - OVER 120-315 ±0.5
   - OVER 315-1000 ±0.8
   - OVER 1000-2000 ±1.2
5. ANGULAR TOLERANCES: 0° 30′

CONTRACT	NAS3-27600
CONTRACTOR	ADF, INC.
TASK ORDER	60
DRAFTER	ADF/ J. IMBURGIA
ENGINEER	ANLX/ M. POLITI
DESIGNER	ADF/ J. IMBURGIA

THIRD ANGLE PROJECTION

NATIONAL AERONAUTICS AND SPACE ADMINISTRATION
JOHN H. GLENN RESEARCH CENTER
LEWIS FIELD
CLEVELAND, OHIO

TEST CHAMBER MODULE ASSEMBLY

67212MELH200

255 CHAMBER DOOR HINGE PIN

PDM REL LEVEL: **BASELINE** PDM REVISION: **-.3**

PDM DATABASE: **FCF**

MODEL NAME: **CHAMBER_HINGE_PIN**

PRIOR TO USE VERIFY THE INTENDED PURPOSE IN PDM ("FOR" ATTRIBUTE)

SIZE	DRAWING NUMBER	REV	BLDG	AREA
A2	67212MEDH255	-	333	-

UNITS: mm

SCALE:	INITIAL REL DATE	SHEET	DISCIPLINE
2:1	07/27/99	1 OF 1	MECHANICAL

PRO/E VERSION: 18.0

REV -

DRAWING NUMBER 67212MEDH255

SIZE A2

NAME:EDJEN OBJECT:67212MEDH255 DATE:30-Oct-00 10:41:39