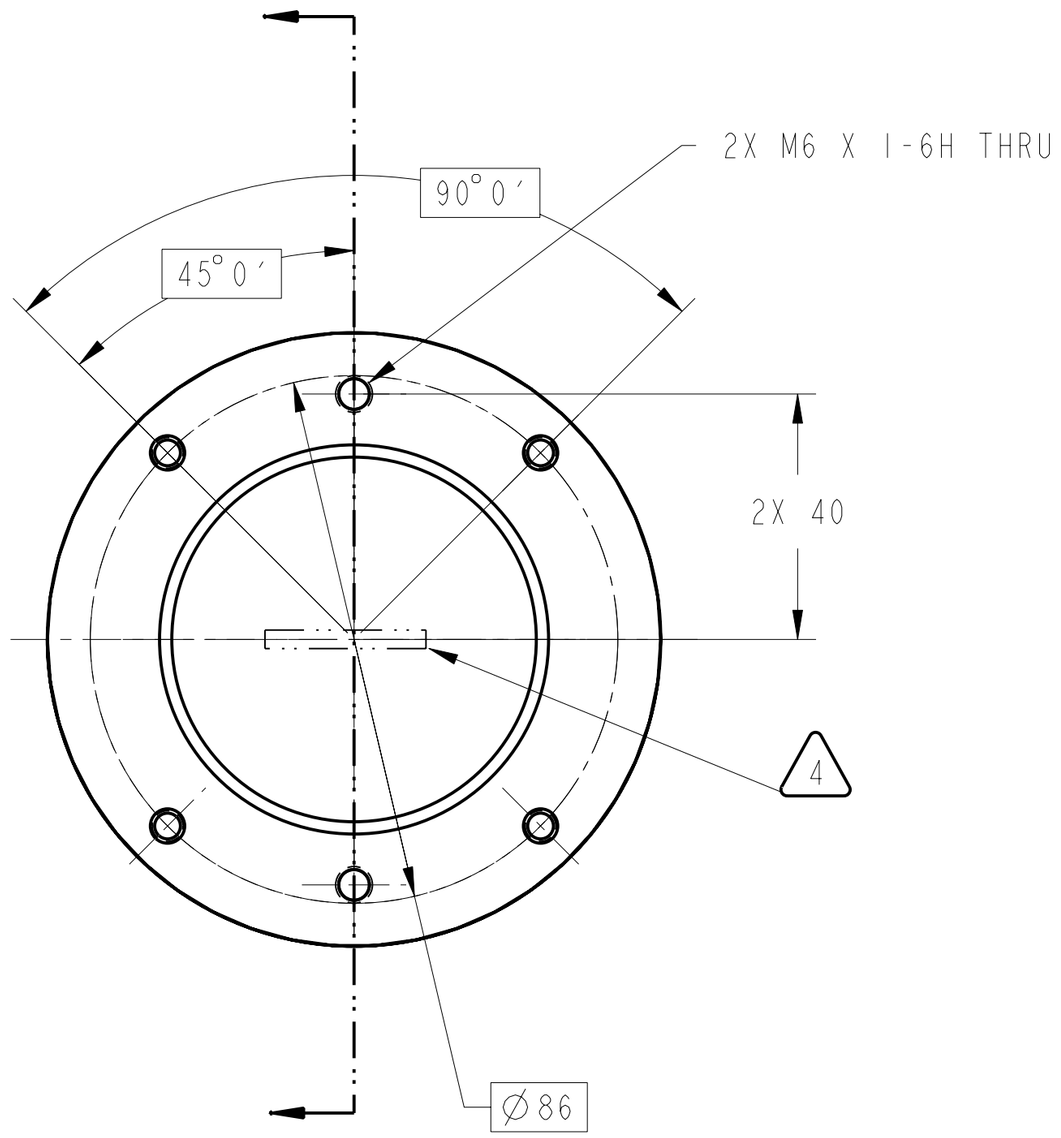

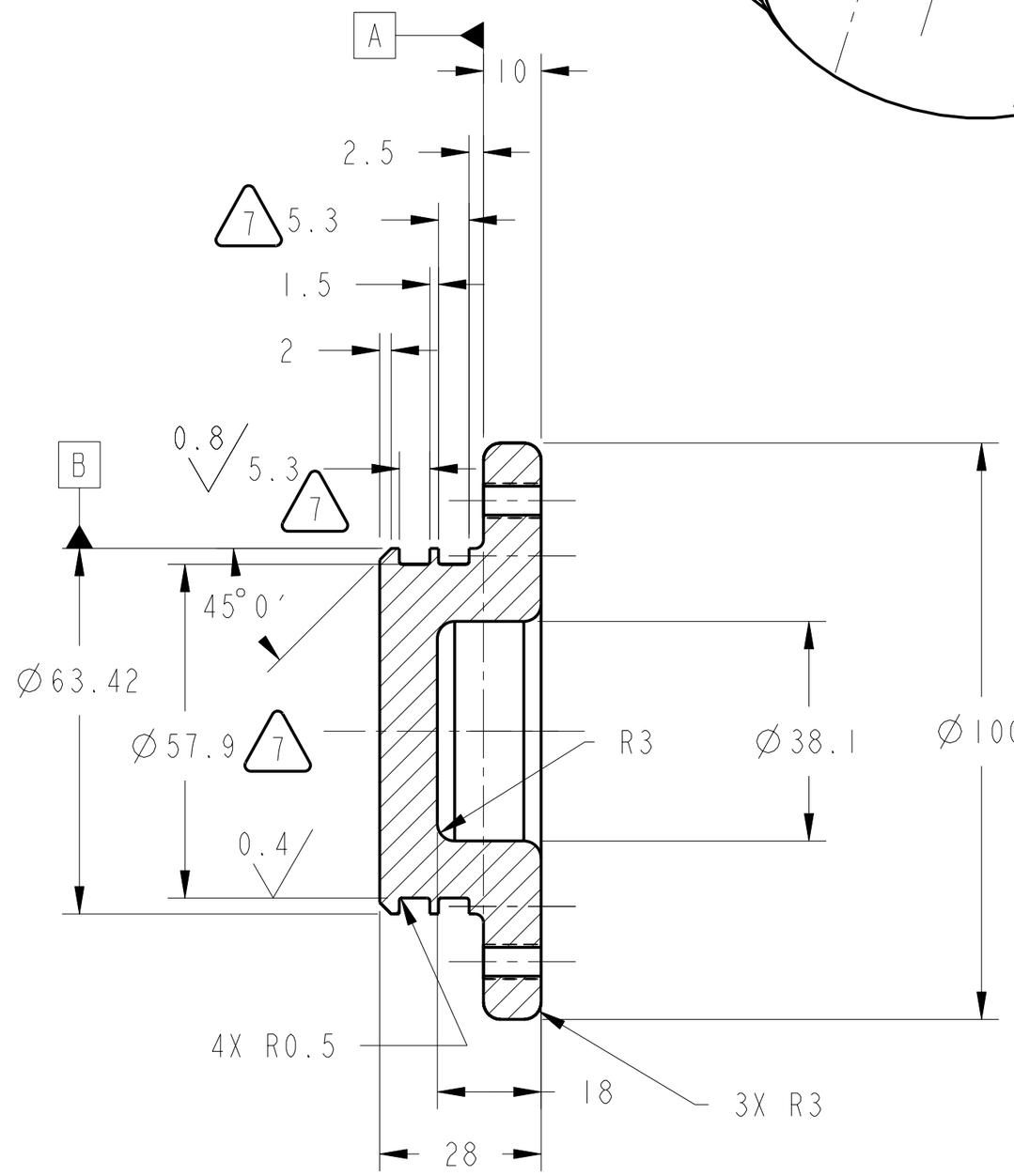

SECTION **A-A**

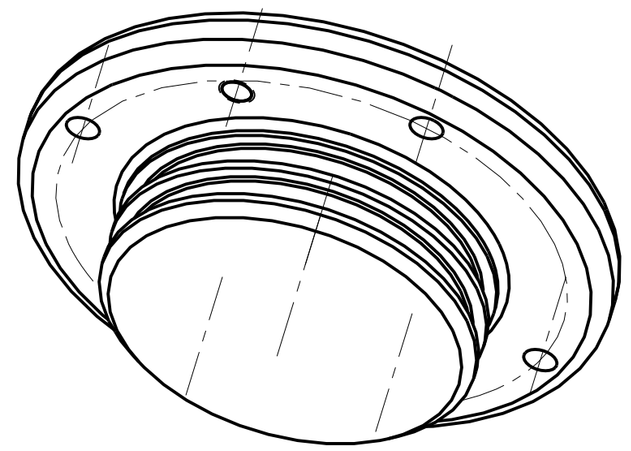

1. MATERIAL: 6061-T6 ALUMINUM PER FEDERAL SPEC QQ-A-250/11.
2. CERTIFICATE OF CONFORMANCE REQUIRED FOR MATERIAL.
3. 1.6 Ra ALL MACHINED SURFACES PER ANSI/ASME B46.1.
4. ELECTROCHEMICAL ETCH DRAWING PART NUMBER 67212MEDH253 ON SPECIFIED SURFACE PER SAE AS478, METHOD 7A (ZONE B5).
5. SURFACE TREAT ENTIRE PART BEFORE ANODIZING PER MIL-C-5541, CLASS 3. USE IRIDITE 14.2 OR REQUESTER APPROVED EQUAL PER MIL-C-81706, CLASS 3, FORM 11, METHOD B OR C AS APPLICABLE. SPOT TOUCH UP BY METHOD B.)
6. HARD ANODIZE, EXCEPT TAPPED HOLES, PER MIL-A-8625, TYPE III, CLASS 2, COLOR: BLACK,.001 TO .002 INCHES THICK.
7. DO NOT ANODIZE INDICATED SURFACES.
8. DIMENSIONS APPLY AFTER ANODIZING.
9. CLEAN SURFACES WITH 190 PROOF ETHYL ALCOHOL. WIPE WITH CLEAN COTTON SWABS AND/OR LINT-FREE CLOTH.
10. HANDLE WITH CLEAN LINT-FREE GLOVES.
11. BEFORE STORAGE, PROTECT WITH CONTAMINATION BARRIER. USE CLEAN, NEW, TRANSPARENT, POLYETHYLENE BAG FOR SMALL ITEMS, OR 4 MIL THICK MINIMUM POLYETHYLENE SHEET SEALED WITH FIBERGLASS PACKAGING TAPE. SEAL AND MARK WITH IDENTIFICATION NUMBER ON TAG ATTACHED TO BAG.
12. PROCESS PLAN REQUIRED.
13. ESTIMATED WEIGHT=0.287 Kg.

CHG	ZONE	DESCRIPTION	APP/DATE

REVISIONS

UNLESS OTHERWISE SPECIFIED:

1. ALL DIMENSIONING AND TOLERANCING PER ASME Y14.5M-1994
2. ALL DIMENSIONS ARE IN MILLIMETERS
3. BREAK EDGES: 0.2-0.5
4. LINEAR TOLERANCES:
   - 0.5-6 ±0.1
   - OVER 6-30 ±0.2
   - OVER 30-120 ±0.3
   - OVER 120-315 ±0.5
   - OVER 315-1000 ±0.8
   - OVER 1000-2000 ±1.2
5. ANGULAR TOLERANCES: 0° 30′

CONTRACT	NAS3-27600
CONTRACTOR	ADF, INC.
TASK ORDER	60
DRAFTER	ADF/ J.IMBURGIA
ENGINEER	ANLX/ M.POLITI
DESIGNER	ADF/ J.IMBURGIA

THIRD ANGLE PROJECTION

NATIONAL AERONAUTICS AND SPACE ADMINISTRATION
JOHN H. GLENN RESEARCH CENTER
LEWIS FIELD
CLEVELAND, OHIO

TEST CHAMBER MODULE ASSEMBLY

67212MELH200

253 END CAP PORT PLUG

PDM REL LEVEL: **RELEASE** PDM REVISION: **x.9+**

PDM DATABASE: **FCF**
MODEL NAME: **67212MEDH253**

PRIOR TO USE VERIFY THE INTENDED PURPOSE IN PDM ("FOR" ATTRIBUTE)

SIZE	DRAWING NUMBER	REV	BLDG	AREA
A2	67212MEDH253	-	333	-
			UNITS: mm	
SCALE: 1:1	INITIAL REL DATE 06/16/99	SHEET 1 OF 1	DISCIPLINE MECHANICAL	

PRO/E VERSION: 18.0

SIZE A2 DRAWING NUMBER 67212MEDH253 REV -

NAME:EDJEN OBJECT:67212MEDH253 DATE:30-Oct-00 10:40:54