COMMERCIAL PARTS LIST

PART TYPE	BALLOON NO	DESCRIPTION	QTY/ ASSY
C	1	PLEATED 304L CRES FILTER DISC, EJAY FILTRATION, INC. PART NO. 84800-0.625-70	1
C	2	TEFLON PELLET, 2.0 DIA. X 1.7 LONG, M/F McMASTER-CARR PTFE ROD PART NO. 8849355K49 OR EQUIVALENT	1 △6

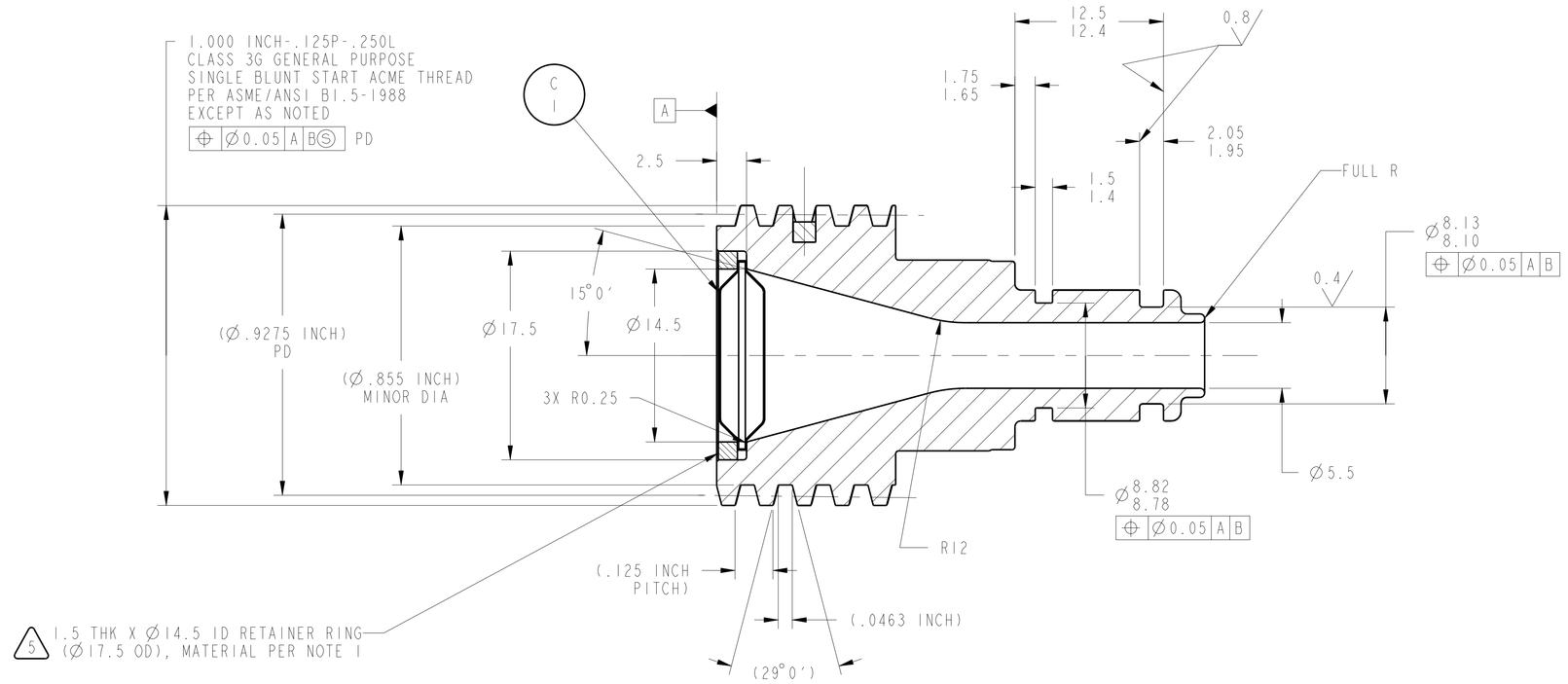

SECTION **A-A**

ISO VIEW

(TANGENT LINES SHOWN)

SCALE 1:1

1. MATERIAL:
   304 STAINLESS STEEL PER FEDERAL SPEC QQ-S-766 AND AS NOTED.
2. CERTIFICATE OF CONFORMANCE REQUIRED FOR ALL MATERIALS.
3. 1.6 Ra ALL MACHINED SURFACES UNLESS OTHERWISE NOTED PER ANSI/ASME B46.1.
4. CLEAN AND PASSIVATE PER MIL-S-5002, PARAGRAPHS 3.4.2.4 AND 3.4.2.4.1 AND FEDERAL SPECIFICATION QQ-P-35, PRIOR TO INSTALLING FILTER AND TEFLON PELLET.
5. △5 MINIMUM SNUG FIT WITH 17.5 DIA. POSITION TO RETAIN FILTER AS SHOWN AND TAC WELD 4 PLACES PER MIL-STD-2219, CLASS C. GRIND WELDS FLUSH.
6. △6 BOTTOM IN HOLE AND BOND IN PLACE USING 3M SCOTCHWELD 1838 B/A EPOXY AS REQUIRED.
7. IDENTIFY BY TAGGING WITH DRAWING PART NUMBER 67212MEDH249, PER SAE AS478, METHOD 35.
8. HANDLE WITH CLEAN, LINT-FREE GLOVES.
9. BEFORE STORAGE, PROTECT WITH CONTAMINATION BARRIER. USE CLEAN, NEW, TRANSPARENT, POLYETHYLENE BAG FOR SMALL ITEMS, OR 4 MIL THICK MINIMUM POLYETHYLENE SHEET SEALED WITH FIBERGLASS PACKAGING TAPE. SEAL AND MARK WITH IDENTIFICATION NUMBER ON TAG ATTACHED TO BAG.
10. ESTIMATED WEIGHT= 0.059 Kg.

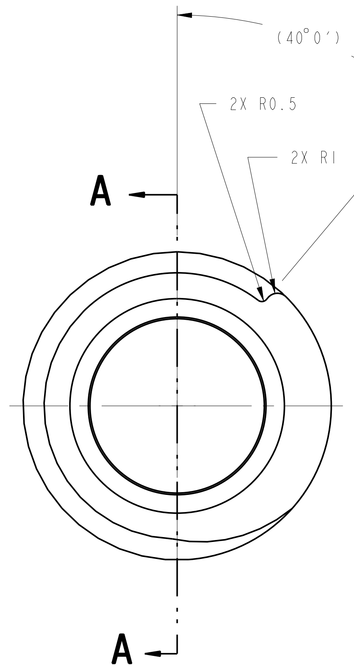

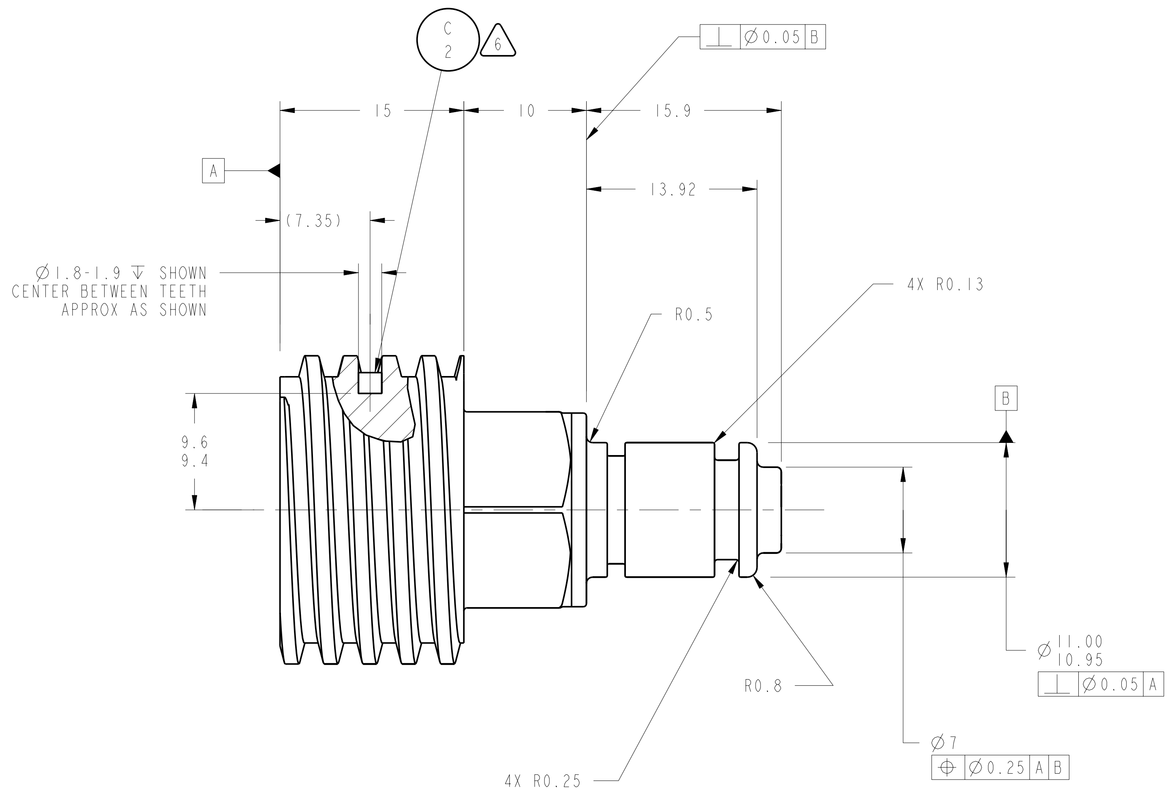

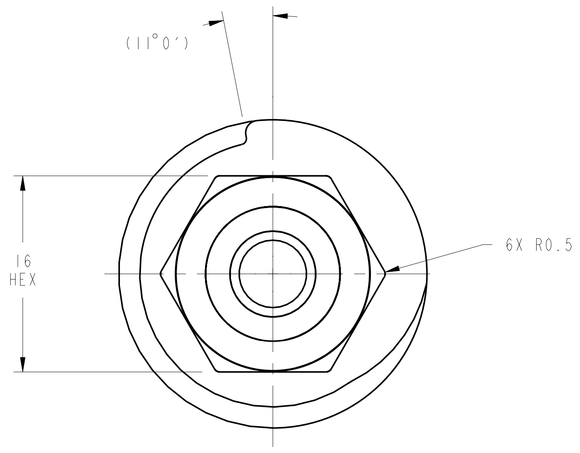

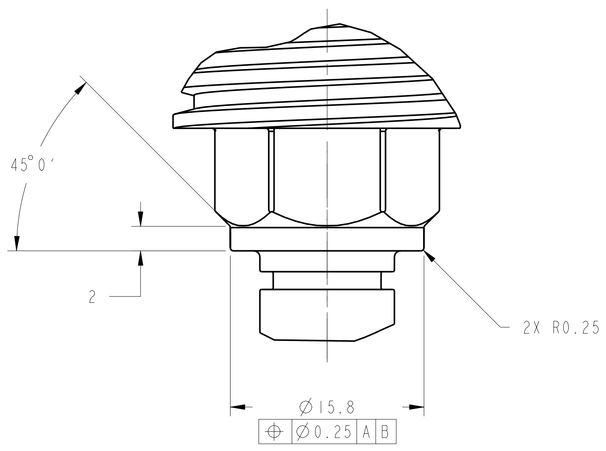

CHG	ZONE	DESCRIPTION	APP/DATE

REVISIONS

UNLESS OTHERWISE SPECIFIED:
1. ALL DIMENSIONING AND TOLERANCING PER ASME Y14.5M-1994
2. ALL DIMENSIONS ARE IN MILLIMETERS
3. BREAK EDGES: 0.2-0.5
4. LINEAR TOLERANCES:
   0.5-6 ±0.1
   OVER 6-30 ±0.2
   OVER 30-120 ±0.3
   OVER 120-315 ±0.5
   OVER 315-1000 ±0.8
   OVER 1000-2000 ±1.2
5. ANGULAR TOLERANCES: 0° 30′

CONTRACT	NAS3-27600
CONTRACTOR	ADF, INC.
TASK ORDER	60
DRAFTER	ADF/D.ROBINSON
ENGINEER	ANLX/D.CATALANO
DESIGNER	ADF/D.ROBINSON

THIRD ANGLE PROJECTION

NATIONAL AERONAUTICS AND SPACE ADMINISTRATION
JOHN H. GLENN RESEARCH CENTER
LEWIS FIELD
CLEVELAND, OHIO

INTERFACE RESOURCE RING ASSEMBLY

67212MELH220

249 GC PORT FILTER ASSEMBLY

PDM REL LEVEL: **RELEASE** PDM REVISION: x.7+

PDM DATABASE: FCF

MODEL NAME: 67212MEDH249

PRIOR TO USE VERIFY THE INTENDED PURPOSE IN PDM ('FOR' ATTRIBUTE)

SIZE	DRAWING NUMBER	REV	BLDG	AREA
A0	67212MEDH249	-	333	-

UNITS: mm

SCALE:	INITIAL REL DATE	SHEET	DISCIPLINE
4:1 AND NOTED	XX/XX/XXXX	1 OF 1	MECHANICAL

PRO/E VERSION: 20.0

REV -

67212MEDH249

SIZE A0

NAME:EDLRA OBJECT:67212MEDH249 DATE:20-Oct-00 10:38:44