1. SOURCE: PAVE TECHNOLOGY CO. INC.

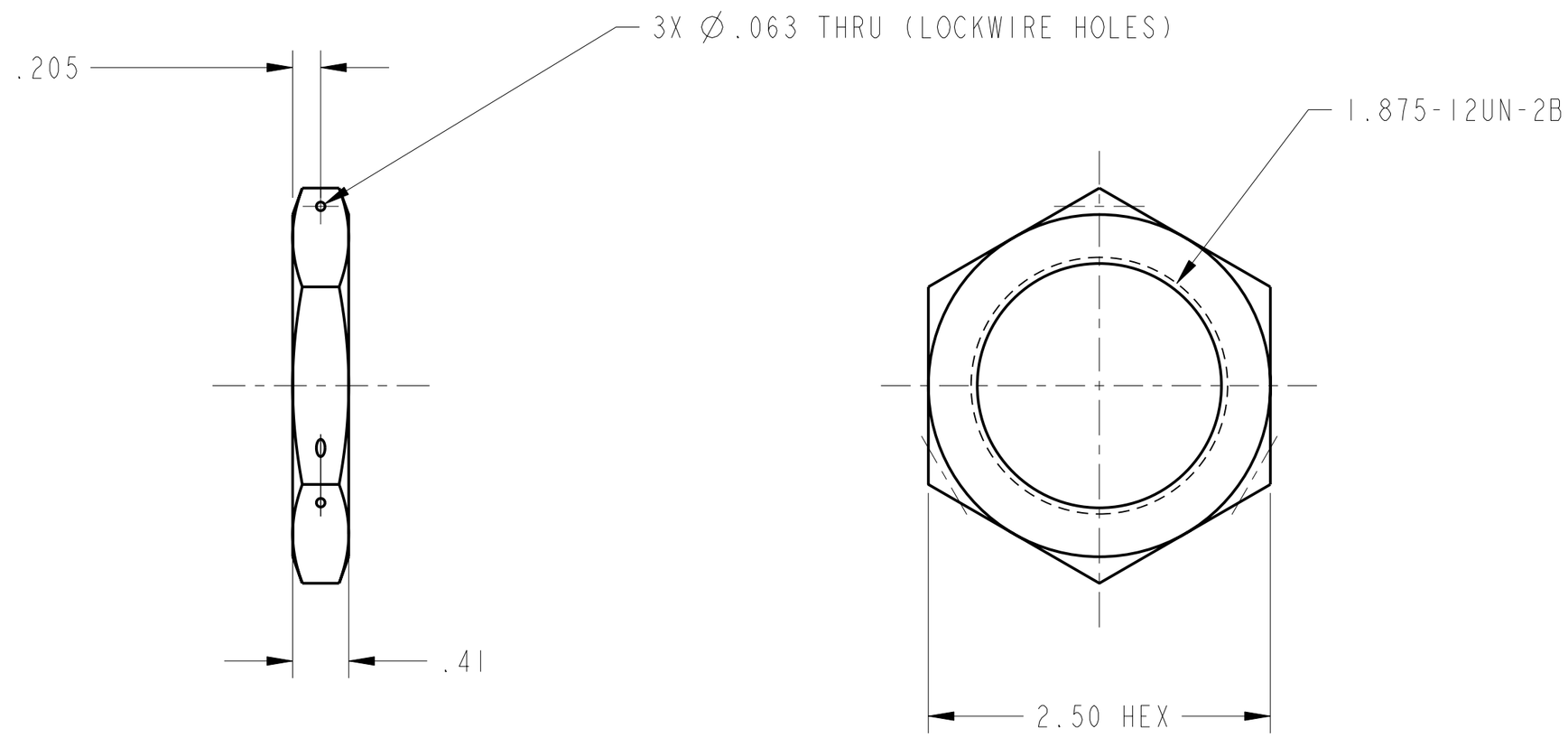

CHG	ZONE	DESCRIPTION	APP/DATE
		REVISIONS	

PRIOR TO USE VERIFY THE INTENDED PURPOSE IN PDM ("FOR" ATTRIBUTE)

UNLESS OTHERWISE SPECIFIED DIMENSIONS ARE IN INCHES

TOLERANCE ON	
.X	± 0.0
.XX	± 0.01
.XXX	± 0.005
FRACTION	± -
ANGULAR	± 0.50°
BREAK EDGES	XXX

CONTRACT	XXX
CONTRACTOR	ANALEX CORP.
TASK ORDER	XXX
DRAFTER	J. IMBURGIA
ENGINEER	M. POLITI
DESIGNER	XXX

DIMENSIONING AND TOLERANCING PER ASME Y14.5M-1994

NATIONAL AERONAUTICS AND SPACE ADMINISTRATION
JOHN H. GLENN RESEARCH CENTER
LEWIS FIELD
CLEVELAND, OHIO

XXX

XXXXXXXXXXX

FEED THRU JAM NUT

PDM REL LEVEL: **WORKING** PDM REVISION: **x.5**

PDM DATABASE: **FCF**
MODEL NAME: **FEEDTHRU_JAM_NUT**

CHECK FOR ANY OUTSTANDING ECO'S PRIOR TO USE

SIZE	DRAWING NUMBER	REV	BLDG	AREA
C	67212MEDH247	X	XXX	XXX
			UNITS: INCH	
SCALE: 1/1	INITIAL REL DATE XX/XX/XX	SHEET 1 OF 1	DISCIPLINE	

PRO/E VERSION: 18.0

REV X
DRAWING NUMBER 67212MEDH247
SIZE C

NAME:EDJEN OBJECT:67212MEDH247 DATE:30-Oct-00 10:38:48