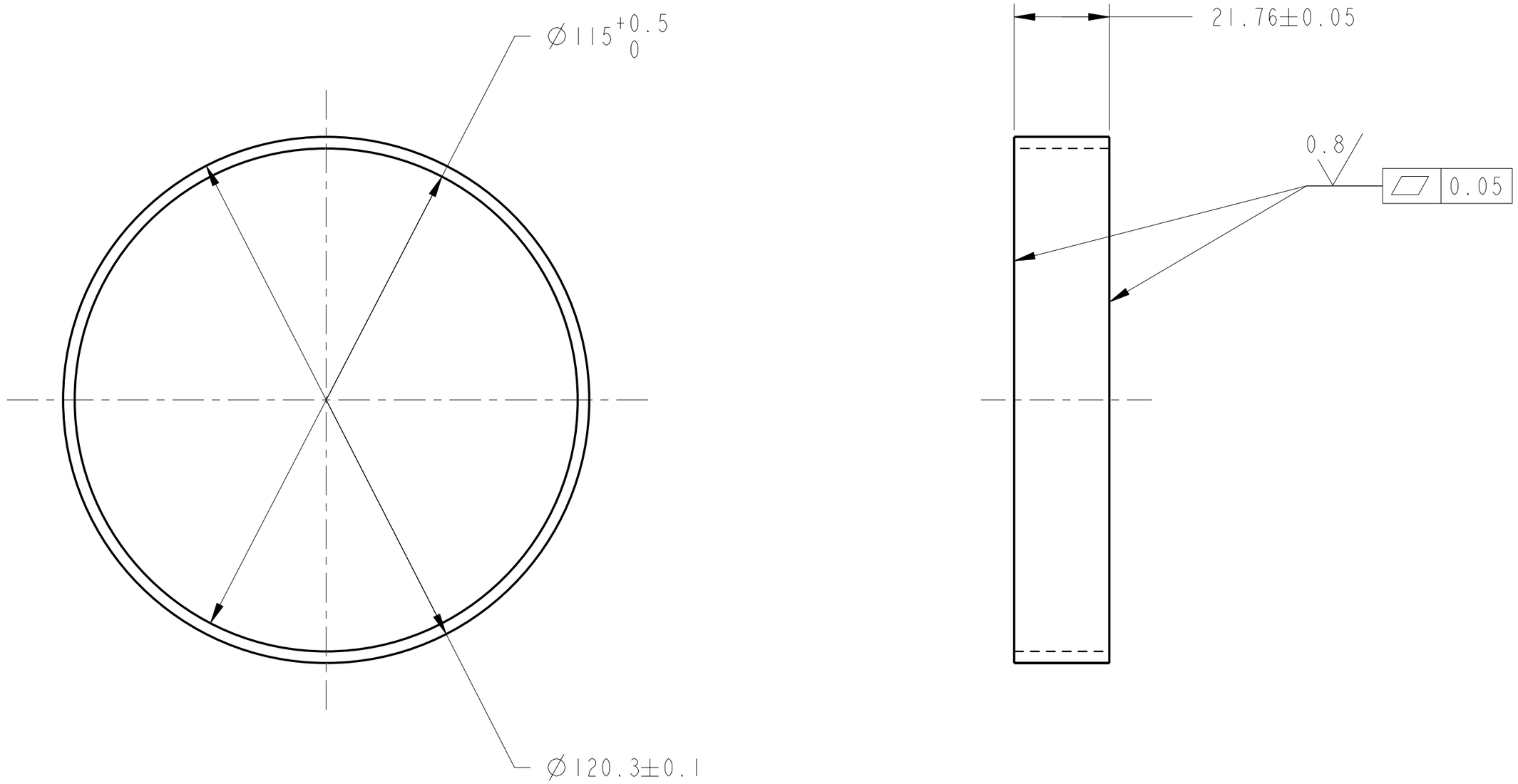


1. MATERIAL:
   6061-T6 ALUMINUM PER FEDERAL SPEC QQ-A-250/11.
2. CERTIFICATE OF CONFORMANCE REQUIRED FOR MATERIAL.
3. 1.6 Ra ALL MACHINED SURFACES PER ANSI/ASME B46.1.
4. HARD BLACK ANODIZE PER MIL-A-8625, TYPE III, CLASS 2, ,002 INCH THICKNESS.
5. CLEAN SURFACES WITH 190 PROOF ETHYL ALCOHOL. WIPE WITH CLEAN COTTON SWABS AND/OR LINT-FREE CLOTH.
6. BEFORE STORAGE, PROTECT WITH CONTAMINATION BARRIER. USE CLEAN, NEW, TRANSPARENT, POLYETHYLENE BAG FOR SMALL ITEMS, OR 4 MIL THICK MINIMUM POLYETHYLENE SHEET SEALED WITH FIBERGLASS PACKAGING TAPE. SEAL AND MARK WITH IDENTIFICATION NUMBER ON TAG ATTACHED TO BAG.
7. ESTIMATED WEIGHT=0.172 Kg,

| CHG | ZONE | DESCRIPTION | APP/DATE |
|---|---|---|---|

REVISIONS

UNLESS OTHERWISE SPECIFIED:

1. ALL DIMENSIONING AND TOLERANCING PER ASME Y14.5M-1994
2. ALL DIMENSIONS ARE IN MILLIMETERS
3. BREAK EDGES: 0.2-0.5
4. LINEAR TOLERANCES:
   - 0.5-6 ±0.1
   - OVER 6-30 ±0.2
   - OVER 30- 120 ±0.3
   - OVER 120-315 ±0.5
   - OVER 315-1000 ±0.8
   - OVER 1000-2000 ±1.2
5. ANGULAR TOLERANCES: 0° 30′

| | |
|---|---|
| CONTRACT | NAS3-27600 |
| CONTRACTOR | ADF INC. |
| TASK ORDER | 060 |
| DRAFTER | ADF/ N. MCMASTER |
| ENGINEER | ADF/ M. POLITI |
| DESIGNER | ADF/ N. MCMASTER |

THIRD ANGLE PROJECTION

NATIONAL AERONAUTICS AND SPACE ADMINISTRATION
JOHN H. GLENN RESEARCH CENTER
LEWIS FIELD
CLEVELAND, OHIO

WINDOW

67212MEDH230

244 WINDOW SPACER

PDM REL LEVEL: **RELEASE** PDM REVISION: **x.13+**

PDM DATABASE: **FCF**

MODEL NAME: **SPACER_21_76MM**

PRIOR TO USE VERIFY THE INTENDED PURPOSE IN PDM ("FOR" ATTRIBUTE)

| SIZE | DRAWING NUMBER | REV | BLDG | AREA |
|---|---|---|---|---|
| A2 | 67212MEDH244 | X | 333 | - |
| | | | UNITS: mm | |
| SCALE: 1:1 | INITIAL REL DATE XX/XX/XX | SHEET 1 OF 1 | DISCIPLINE MECHANICAL | |

PRO/E VERSION: 19.0

REV X

SIZE A2 DRAWING NUMBER 67212MEDH244

NAME:EDJEN OBJECT:67212MEDH244 DATE:30-Oct-00 10:37:54