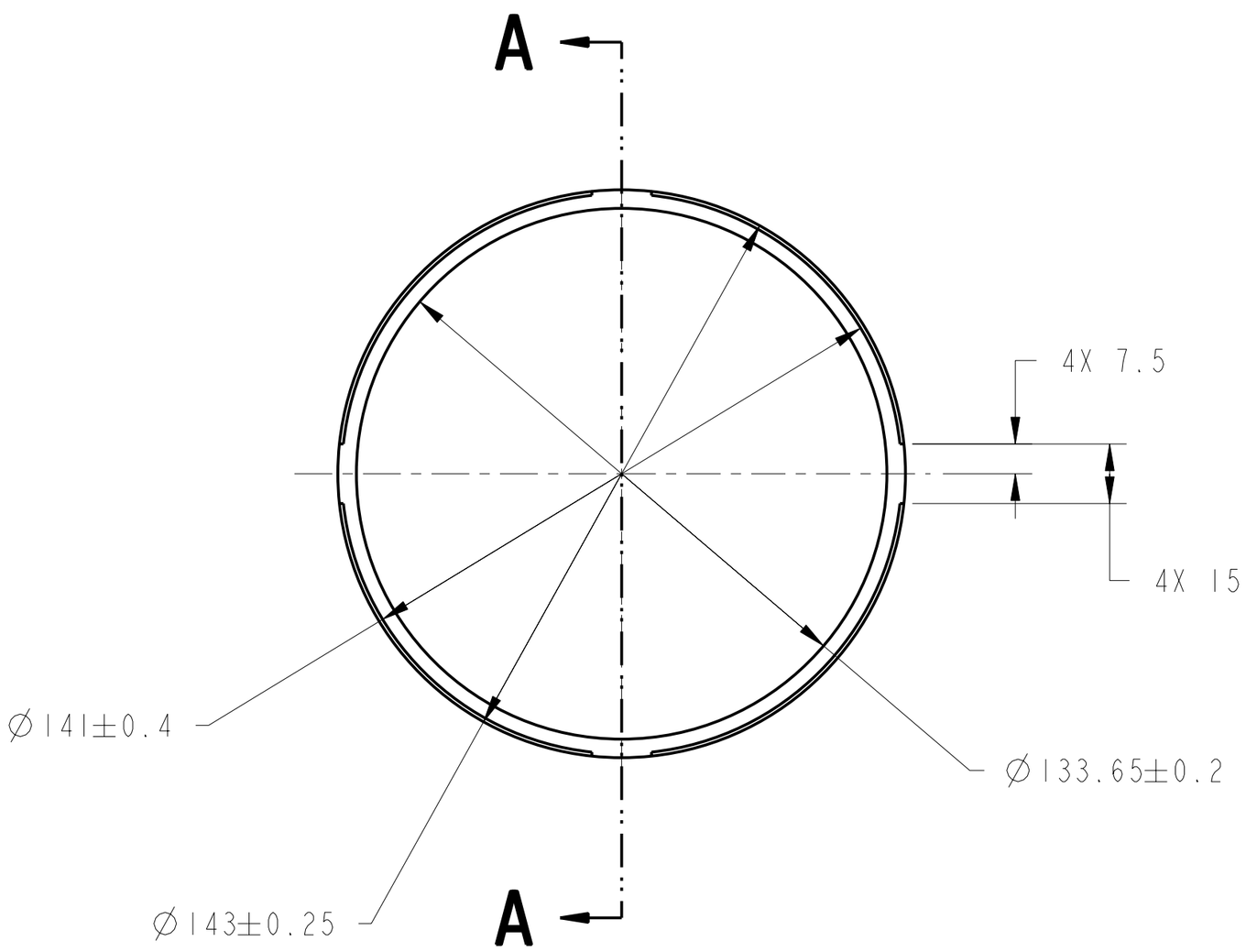

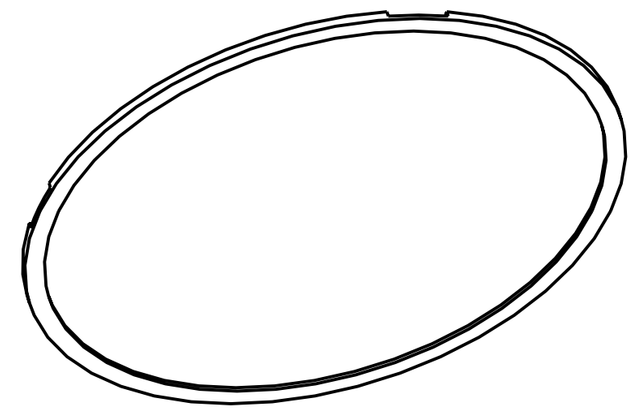

ISO VIEW

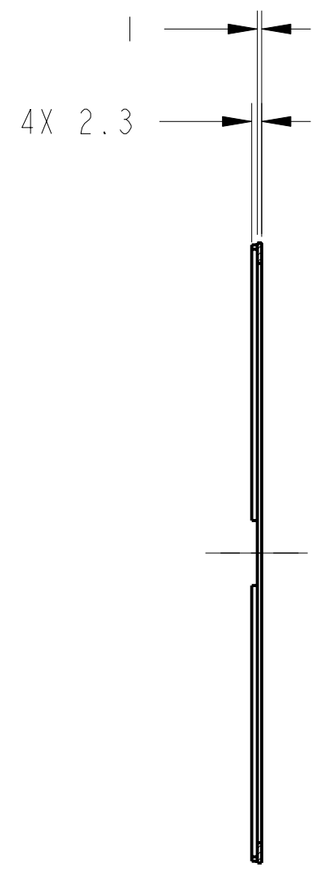

SECTION A-A

1. MATERIAL:
   6061-T6 ALUMINUM PER FEDERAL SPEC QQ-A-250/11.
2. CERTIFICATE OF CONFORMANCE REQUIRED FOR MATERIAL.
3. 1.6 Ra ALL MACHINED SURFACES PER ANSI/ASME B46.1.
4. HARD ANODIZE PER MIL-A-8625, TYPE III, CLASS 2, COLOR: BLACK, .001-.002 INCH THICKNESS.
5. CLEAN SURFACES WITH 190 PROOF ETHYL ALCOHOL. WIPE WITH CLEAN COTTON SWABS AND/OR LINT-FREE CLOTH.
6. BEFORE STORAGE, PROTECT WITH CONTAMINATION BARRIER. USE CLEAN, NEW, TRANSPARENT, POLYETHYLENE BAG FOR SMALL ITEMS, OR 4 MIL THICK MINIMUM POLYETHYLENE SHEET SEALED WITH FIBERGLASS PACKAGING TAPE. SEAL AND MARK WITH IDENTIFICATION NUMBER ON TAG ATTACHED TO BAG.
7. ESTIMATED WEIGHT=0.007 Kg.

CHG	ZONE	DESCRIPTION	APP/DATE

REVISIONS

UNLESS OTHERWISE SPECIFIED:

1. ALL DIMENSIONING AND TOLERANCING PER ASME Y14.5M-1994
2. ALL DIMENSIONS ARE IN MILLIMETERS
3. BREAK EDGES: 0.2-0.5
4. LINEAR TOLERANCES:
   - 0.5-6 ±0.1
   - OVER 6-30 ±0.2
   - OVER 30-120 ±0.3
   - OVER 120-315 ±0.5
   - OVER 315-1000 ±0.8
   - OVER 1000-2000 ±1.2
5. ANGULAR TOLERANCES: 0° 30′

CONTRACT	NAS3-27600
CONTRACTOR	ADF INC.
TASK ORDER	060
DRAFTER	ADF/ N. MCMASTER
ENGINEER	AOS/ M. POLITI
DESIGNER	ADF/ N. MCMASTER

THIRD ANGLE PROJECTION

NATIONAL AERONAUTICS AND SPACE ADMINISTRATION
JOHN H. GLENN RESEARCH CENTER
LEWIS FIELD
CLEVELAND, OHIO

WINDOW

67212MEDH230

242 WAVE SPRING RETAINER

PDM REL LEVEL: RELEASE PDM REVISION: x.10

PDM DATABASE: FCF

MODEL NAME: 67212MEDH242

PRIOR TO USE VERIFY THE INTENDED PURPOSE IN PDM ("FOR" ATTRIBUTE)

SIZE	DRAWING NUMBER	REV	BLDG	AREA
A2	67212MEDH242	-	333	-
			UNITS: mm	
SCALE: ~7:10	INITIAL REL DATE XX/XX/XX	SHEET 1 OF 1	DISCIPLINE MECHANICAL	

PRO/E VERSION: 18.0

SIZE A2 DRAWING NUMBER 67212MEDH242 REV -

NAME:EDJEN OBJECT:67212MEDH242 DATE:30-Oct-00 10:37:14