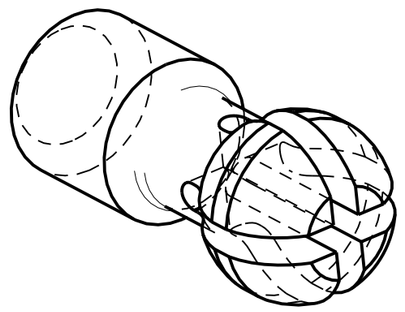

ISO VIEW

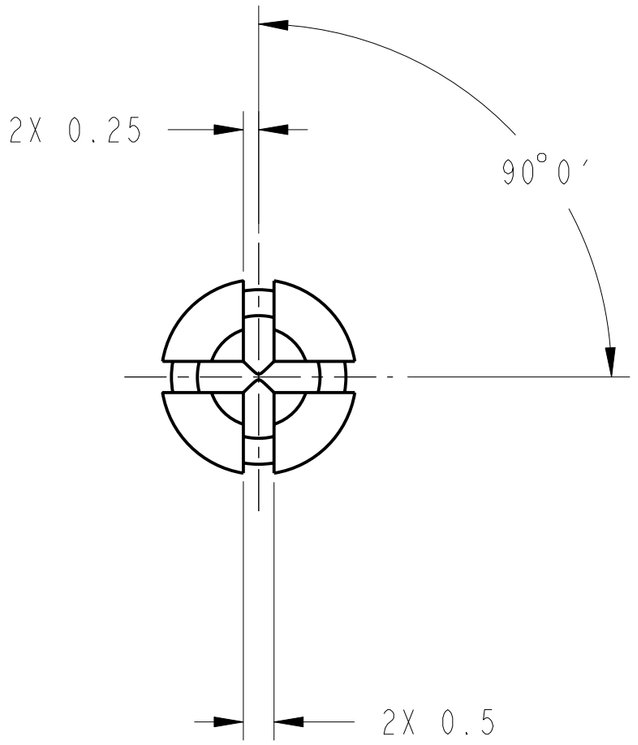


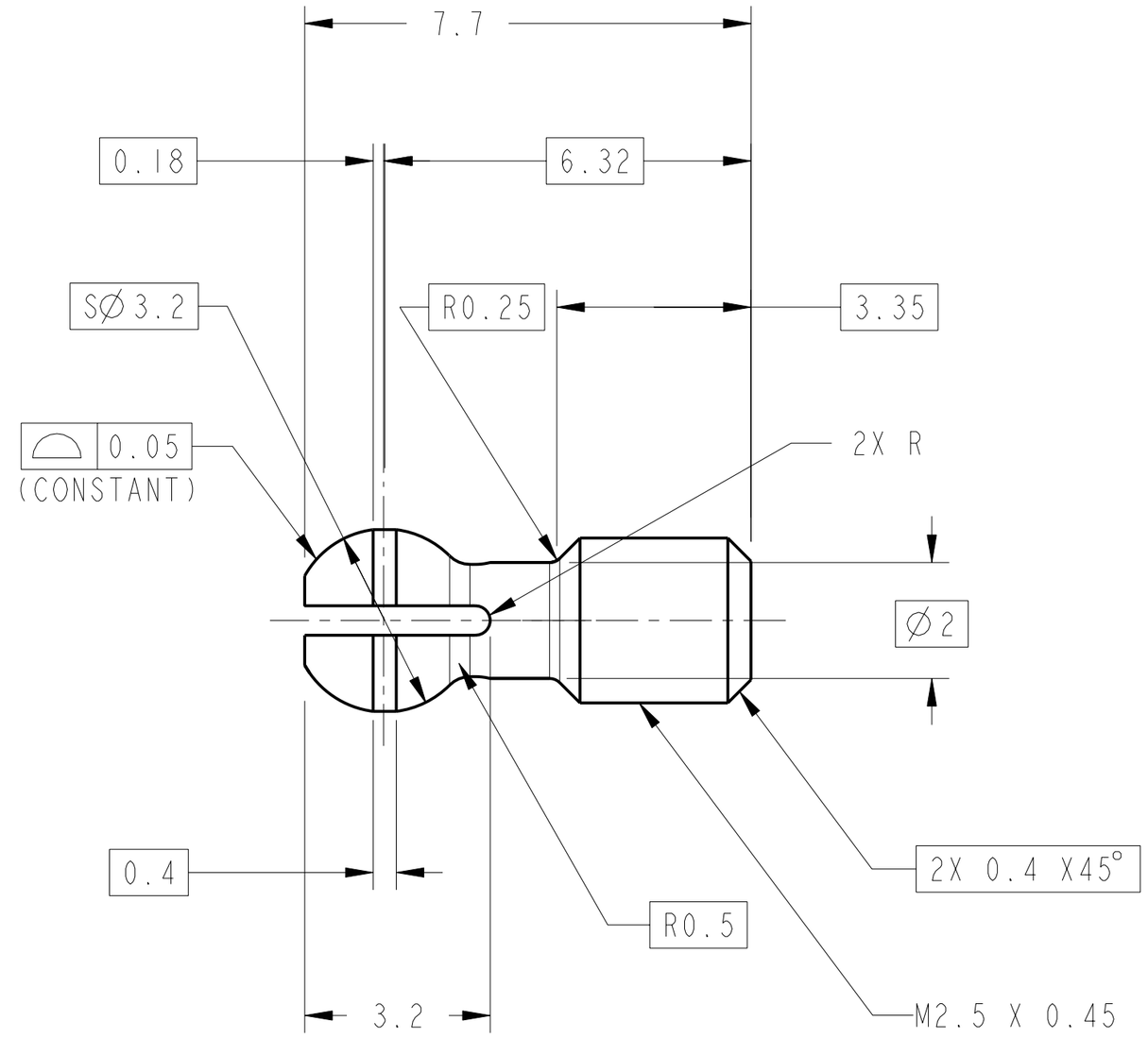


1. MATERIAL:
   MATERIAL: 17-4 PH ANNEALED STAINLESS STEEL BAR PER AMS 5643, CONDITION 1100.
2. CERTIFICATE OF CONFORMANCE REQUIRED FOR MATERIAL.
3. 1.6 ALL OVER PER ANSI/ASME B46.1.
4. CLEAN AND PASSIVATE PER MIL-S-5002, PARAGRAPHS 3.4.2.4 AND 3.4.2.4.1 AND FEDERAL SPECIFICATION QQ-P-35.
5. BEFORE STORAGE, PROTECT WITH CONTAMINATION BARRIER. USE CLEAN, NEW, TRANSPARENT, POLYETHYLENE BAG FOR SMALL ITEMS, OR 4 MIL THICK MINIMUM POLYETHYLENE SHEET SEALED WITH FIBERGLASS PACKAGING TAPE. SEAL AND MARK WITH IDENTIFICATION NUMBER ON TAG ATTACHED TO BAG.
6. ESTIMATED WEIGHT=0.000 Kg.

| CHG | ZONE | DESCRIPTION | APP/DATE |
|---|---|---|---|

REVISIONS

UNLESS OTHERWISE SPECIFIED:

1. ALL DIMENSIONING AND TOLERANCING PER ASME Y14.5M-1994
2. ALL DIMENSIONS ARE IN MILLIMETERS
3. BREAK EDGES: 0.2-0.5
4. LINEAR TOLERANCES:
   0.5-6 ±0.1
   OVER 6-30 ±0.2
   OVER 30- 120 ±0.3
   OVER 120-315 ±0.5
   OVER 315-1000 ±0.8
   OVER 1000-2000 ±1.2
5. ANGULAR TOLERANCES: 0° 30′

| | |
|---|---|
| CONTRACT | NAS3-27600 |
| CONTRACTOR | ADF INC. |
| TASK ORDER | 060 |
| DRAFTER | M. AYNIK |
| ENGINEER | ADS/M. POLITI |
| DESIGNER | ADF/J. IMBURGIA |

THIRD ANGLE PROJECTION

NATIONAL AERONAUTICS AND SPACE ADMINISTRATION
JOHN H. GLENN RESEARCH CENTER
LEWIS FIELD
CLEVELAND, OHIO

WINDOW

67212MEDH230

238 "D" HANDLE LATCH STUD

PDM REL LEVEL: **RELEASE** PDM REVISION: **x.9**

PDM DATABASE: **FCF**

MODEL NAME: **67212MEDH238**

PRIOR TO USE VERIFY THE INTENDED PURPOSE IN PDM ("FOR" ATTRIBUTE)

| SIZE | DRAWING NUMBER | REV | BLDG | AREA |
|---|---|---|---|---|
| A2 | 67212MEDH238 | - | 333 | - |
| | | | UNITS: mm | |
| SCALE: 10:1 | INITIAL REL DATE XX/XX/XX | SHEET 1 OF 1 | DISCIPLINE MECHANICAL | |

PRO/E VERSION: 18.0

SIZE A2 DRAWING NUMBER 67212MEDH238 REV -

NAME:EDJEN OBJECT:67212MEDH238 DATE:30-Oct-00 10:35:49