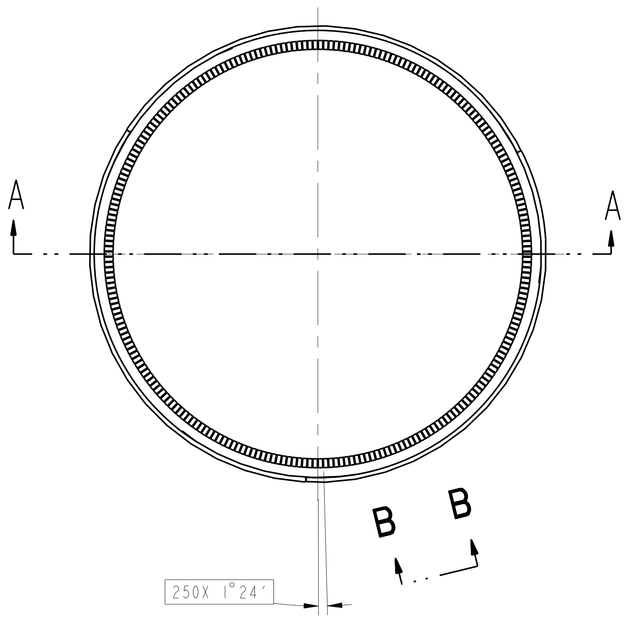

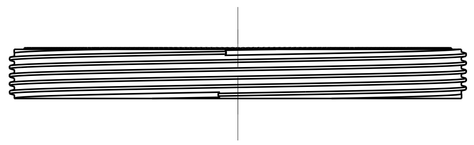

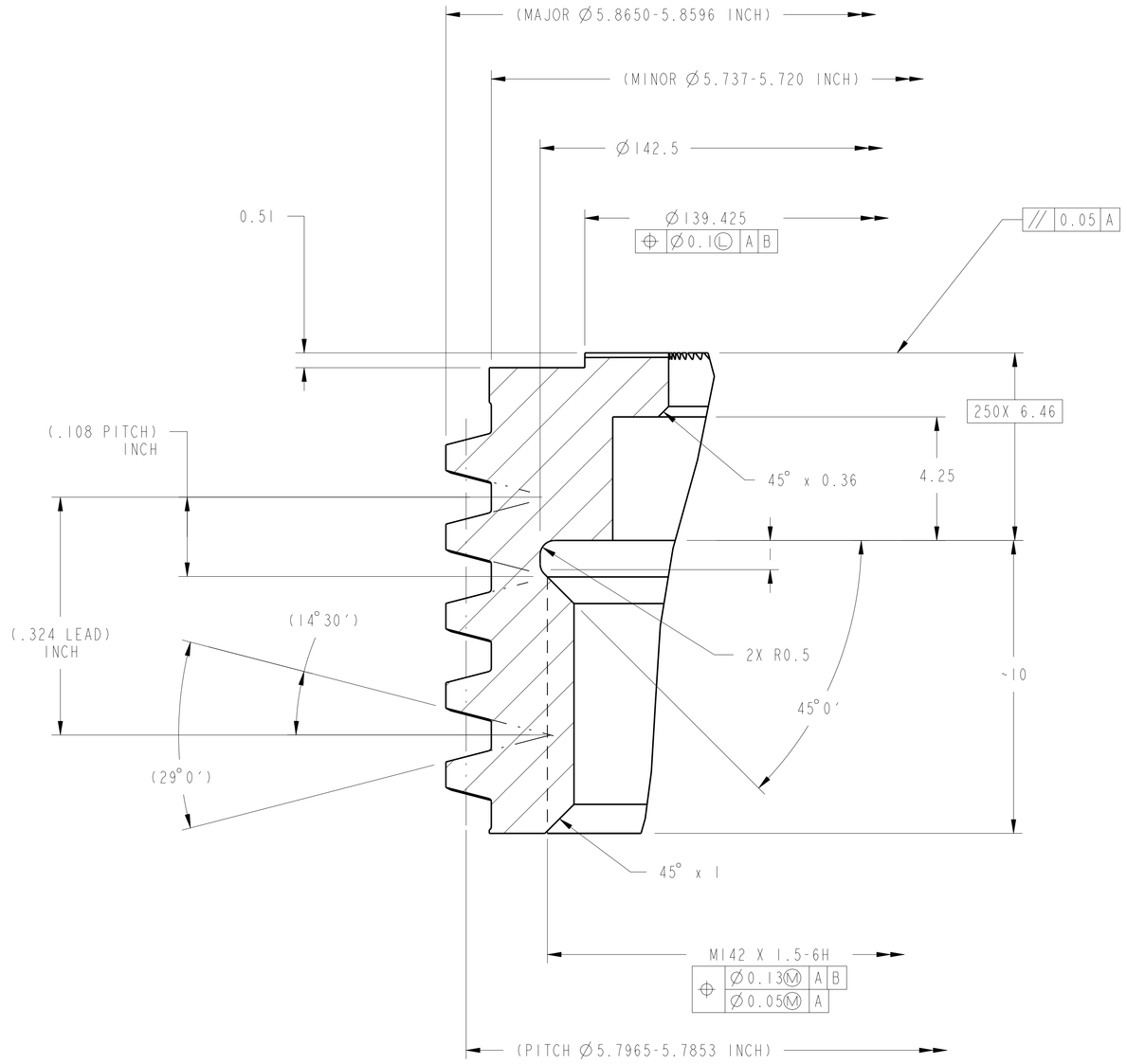

DETAIL C
SCALE 10:1

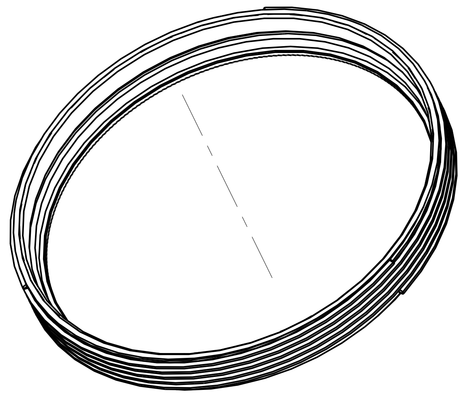

ISO VIEW

1. MATERIAL:
   6061-T6 ALUMINUM PER FED SPEC
   QQ-A-250/11.
2. CERTIFICATE OF CONFORMANCE REQUIRED FOR MATERIAL.
3. ULTRASONIC INSPECT PER MIL-STD-2154, PRIOR TO FABRICATION. ACCEPTANCE PER SECTION 5.5.4., TABLE VI.
4. FINISHED PART MUST PASS DYE PENETRANT INSPECTION PER ASTM E1417. ACCEPTANCE PER MIL-STD-1907.
5. 1.6 ✓ ALL MACHINED SURFACES UNLESS OTHERWISE NOTED PER ANSI/ASME B46.1.
6. HARD BLACK ANODIZE WITH TEFLON PER MIL-A-8625, TYPE III, CLASS 2, BLACK, .001-.002 INCH THICKNESS.
7. ALL DIMENSIONS APPLY AFTER HARD ANNODIZING, EXCEPT AS NOTED.
8. CLEAN SURFACES WITH 190 PROOF ETHYL ALCOHOL. WIPE WITH CLEAN COTTON SWABS AND/OR LINT-FREE CLOTH.
9. BEFORE STORAGE, PROTECT WITH CONTAMINATION BARRIER. USE CLEAN, NEW, TRANSPARENT, POLYETHYLENE BAG FOR SMALL ITEMS, OR 4 MIL THICK MINIMUM POLYETHYLENE SHEET SEALED WITH FIBERGLASS PACKAGING TAPE. SEAL AND MARK WITH IDENTIFICATION NUMBER ON TAG ATTACHED TO BAG.
10. PROCESS PLAN REQUIRED.
11. ESTIMATED WEIGHT=0.080 Kg.

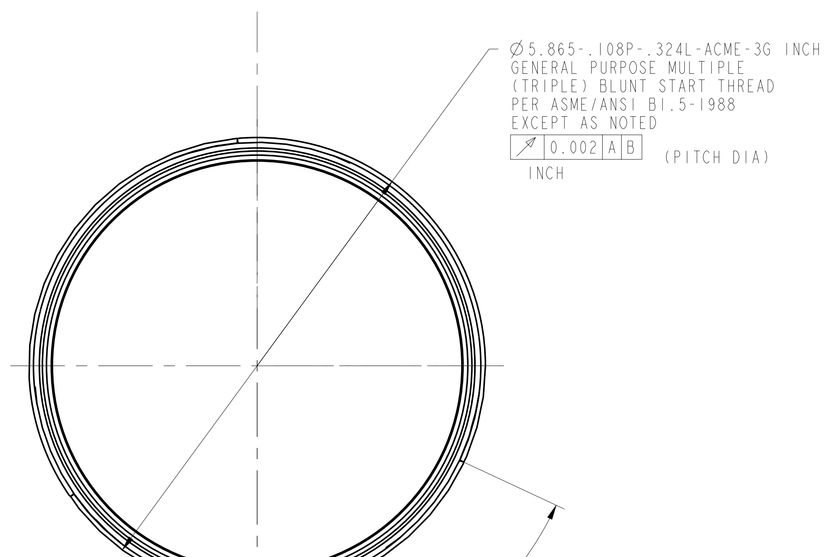

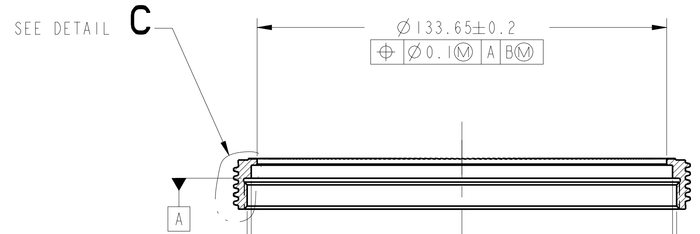

SECTION A-A

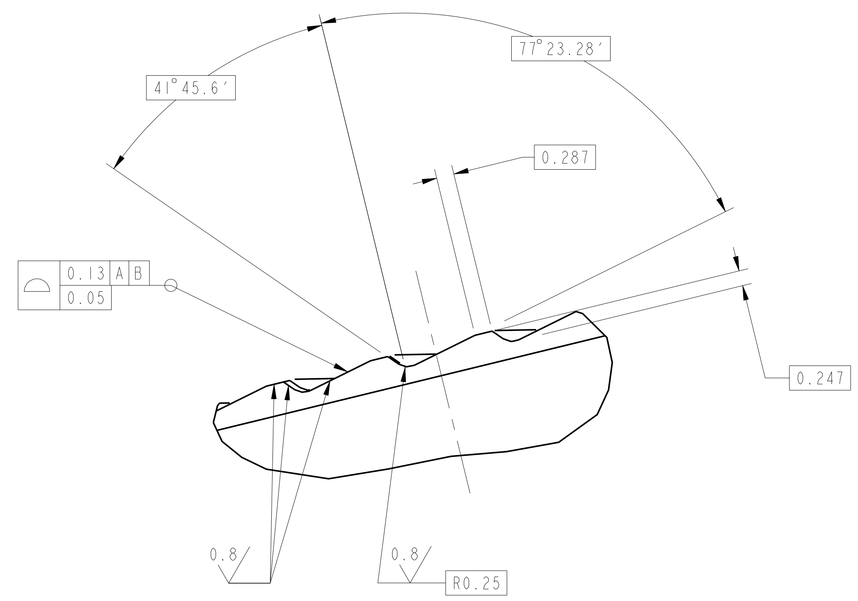

PARTIAL VIEW B-B
TYPICAL 250 PLACES
SCALE 20:1

CHG	ZONE	DESCRIPTION	APP/DATE
		REVISIONS	

UNLESS OTHERWISE SPECIFIED:
1. ALL DIMENSIONING AND TOLERANCING PER ASME Y14.5M-1994
2. ALL DIMENSIONS ARE IN MILLIMETERS
3. BREAK EDGES: 0.2-0.5
4. LINEAR TOLERANCES:
   0.5-6 ±0.1
   OVER 6-30 ±0.2
   OVER 30-120 ±0.3
   OVER 120-315 ±0.5
   OVER 315-1000 ±0.8
   OVER 1000-2000 ±1.2
5. ANGULAR TOLERANCES: 0° 30′

CONTRACT	NAS3-27600
CONTRACTOR	ADF INC.
TASK ORDER	060
DRAFTER	ADF/ N.MCMASTER
ENGINEER	AOS/ M.POLITI
DESIGNER	ADF/ N.MCMASTER

THIRD ANGLE PROJECTION

NATIONAL AERONAUTICS AND SPACE ADMINISTRATION
JOHN H. GLENN RESEARCH CENTER
LEWIS FIELD
CLEVELAND, OHIO

WINDOW

67212MEDH230

234 RETAINER NUT

PDM REL LEVEL: RELEASE PDM REVISION: x.10
PDM DATABASE: FCF
MODEL NAME: 67212MEDH234
PRIOR TO USE VERIFY THE INTENDED PURPOSE IN PDM ("FOR" ATTRIBUTE)

SIZE	DRAWING NUMBER	REV	BLDG	AREA
A0	67212MEDH234	-	333	-
			UNITS: mm	
SCALE: 1:1	INITIAL REL DATE XX/XX/XX	SHEET 1 OF 1	DISCIPLINE MECHANICAL	

PRO/E VERSION: 20.0

DRAWING NUMBER A0 67212MEDH234 REV -

NAME:FBGEN OBJECT:67212MEDH234 DATE:30-Oct-00 10:34:06