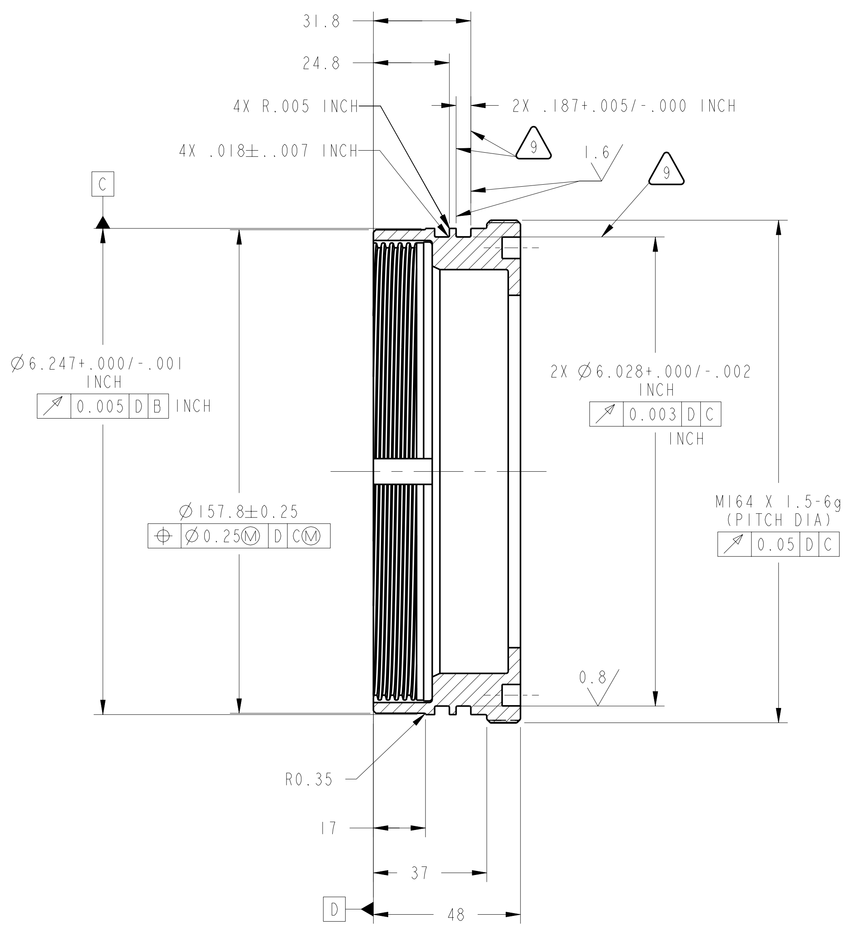

SECTION **B-B**

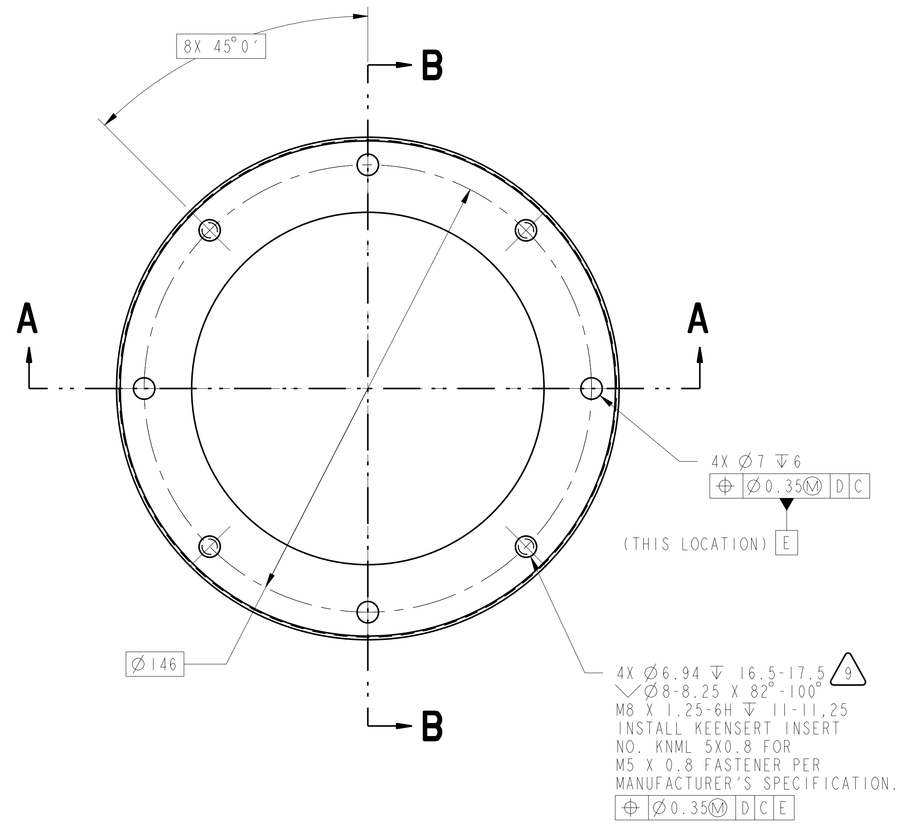

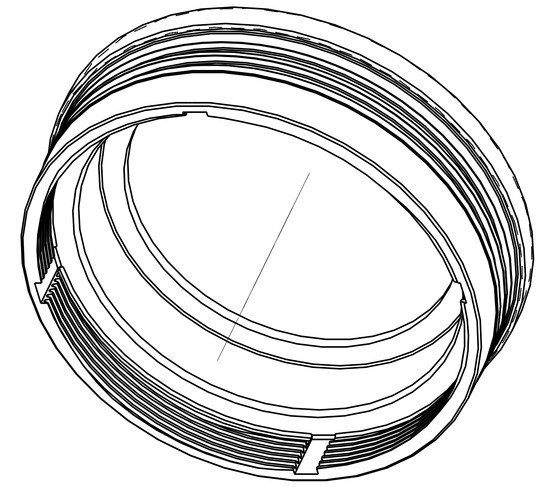

ISO VIEW

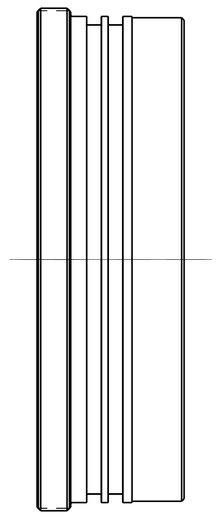

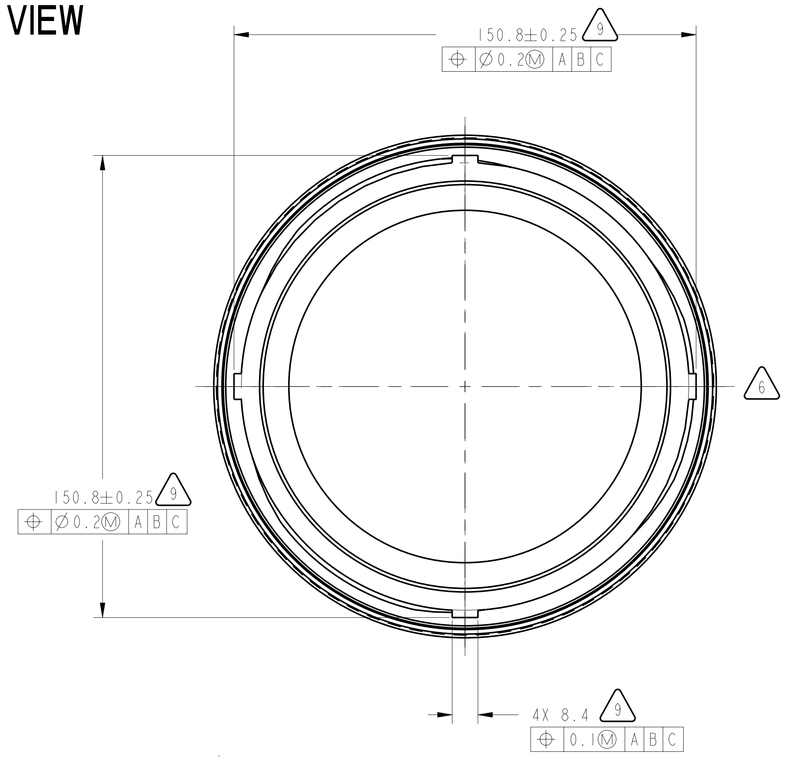

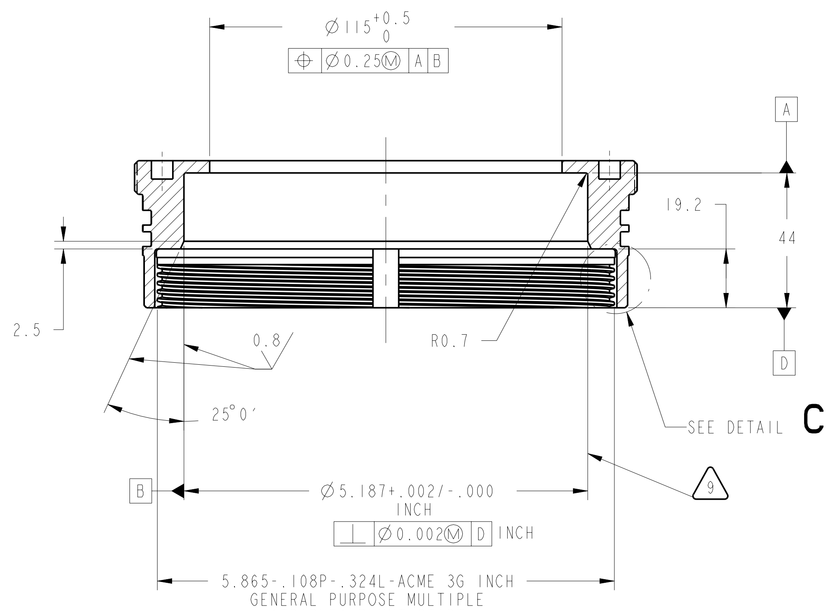

SECTION **A-A**

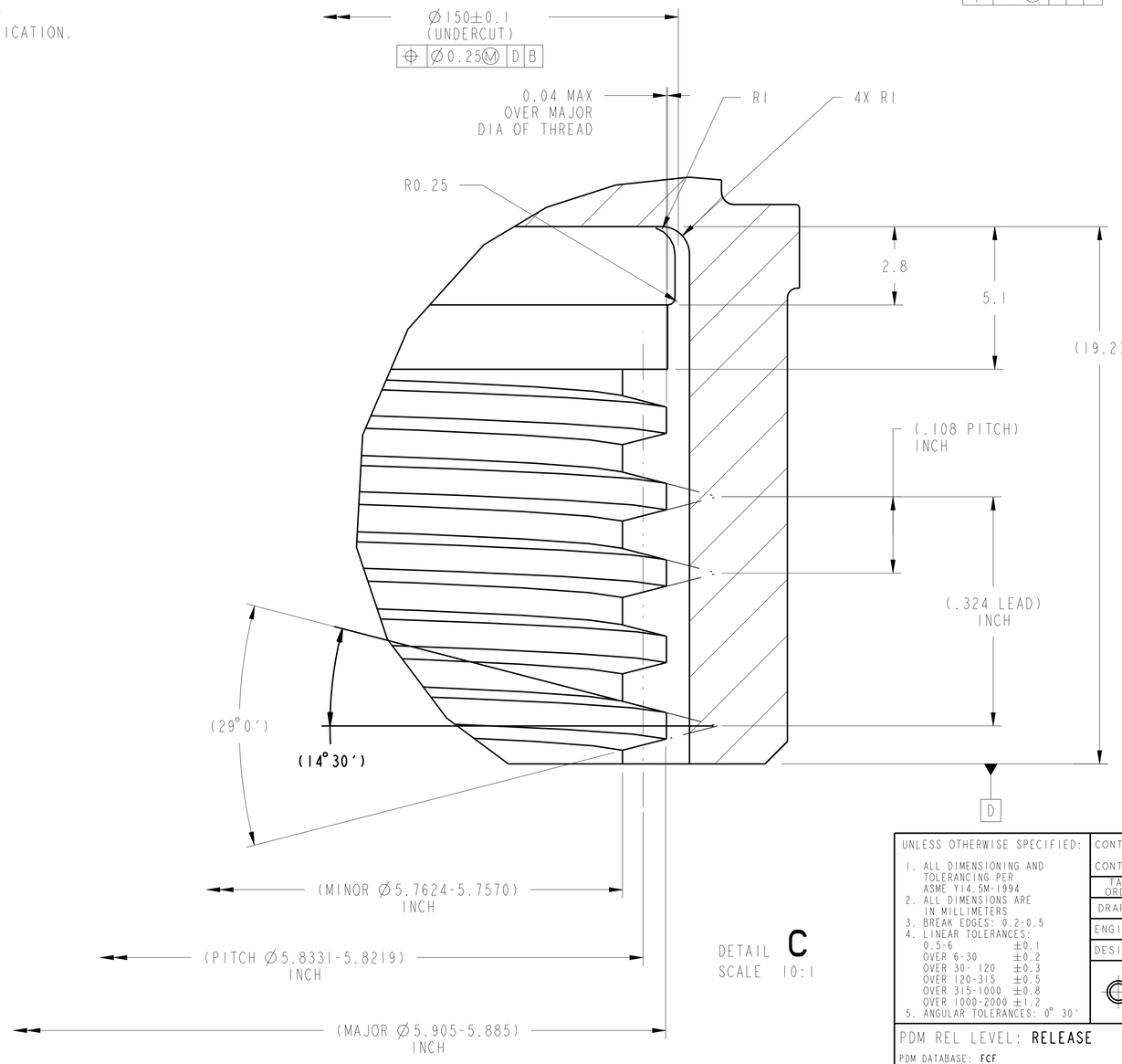

DETAIL **C**
SCALE 10:1

1. MATERIAL: 6061-T6 ALUMINUM PLATE OR BAR PER FEDERAL SPEC QQ-A-250/11.
2. CERTIFICATE OF CONFORMANCE REQUIRED FOR MATERIAL.
3. ULTRASONIC INSPECT PER MIL-STD-2154, PRIOR TO FABRICATION. ACCEPTANCE PER SECTION 5.5.4., TABLE VI.
4. FINISHED PART MUST PASS DYE PENETRANT INSPECTION PER ASTM E1417. ACCEPTANCE PER MIL-STD-1907.
5. 1.6 ALL MACHINED SURFACES UNLESS OTHERWISE NOTED PER ANSI/ASME B46.1
6. START FIRST THREAD LEAD AT CENTER OF ANY SLOT.
7. SURFACE TREATMENT PER MIL-C-5541, CLASS 3. USE IRIDITE 14.2 OR REQUESTER APPROVED EQUAL PER MIL-C-81706, CLASS 3, FORM II, METHOD B OR C AS APPLICABLE. SPOT TOUCH UP BY METHOD B.
8. HARD BLACK ANODIZE INTERIOR AND EXTERIOR SURFACES (EXCEPT SURFACES INDICATED PER NOTE 9, AND TAPPED HOLES PER MIL-A-8625, TYPE III, CLASS 2, .001-.002 INCH THICK PRIOR TO INSTALLING KEENSERTS. ALL DIMENSIONS APPLY AFTER ANODIZE.
9. DO NOT BLACK ANODIZE SURFACES INDICATED.
10. CLEAN SURFACES WITH 190 PROOF ETHYL ALCOHOL. WIPE WITH CLEAN COTTON SWABS AND/OR LINT-FREE CLOTH.
11. BEFORE STORAGE, PROTECT WITH CONTAMINATION BARRIER. USE CLEAN, NEW, TRANSPARENT, POLYETHYLENE BAG FOR SMALL ITEMS, OR 4 MIL THICK MINIMUM POLYETHYLENE SHEET SEALED WITH FIBERGLASS PACKAGING TAPE. SEAL AND MARK WITH IDENTIFICATION NUMBER ON TAG ATTACHED TO BAG.
12. PROCESS PLAN REQUIRED.
13. ESTIMATED WEIGHT: 0.610 Kg.

UNLESS OTHERWISE SPECIFIED:
1. ALL DIMENSIONING AND TOLERANCING PER ASME Y14.5M-1994
2. ALL DIMENSIONS ARE IN MILLIMETERS
3. BREAK EDGES: 0.2-0.5
4. LINEAR TOLERANCES:
   0.5-6 ±0.1
   OVER 6-30 ±0.2
   OVER 30-120 ±0.3
   OVER 120-315 ±0.5
   OVER 315-1000 ±0.8
   OVER 1000-2000 ±1.2
5. ANGULAR TOLERANCES: 0° 30′

CONTRACT	NAS3-27600
CONTRACTOR	ADF INC.
TASK ORDER	060
DRAFTER	ADF/ J. IMBURGIA
ENGINEER	AOS/ M. POLITI
DESIGNER	ADF/ J. IMBURGIA

THIRD ANGLE PROJECTION

CHG	ZONE	DESCRIPTION	APP/DATE

REVISIONS

NATIONAL AERONAUTICS AND SPACE ADMINISTRATION
JOHN H. GLENN RESEARCH CENTER
LEWIS FIELD
CLEVELAND, OHIO

TEST CHAMBER MODULE ASSEMBLY

67212MEDH200

231 WINDOW INSERT

PDM REL LEVEL: **RELEASE** PDM REVISION: x.12
PDM DATABASE: FCF
MODEL NAME: 67212MEDH231
PRIOR TO USE VERIFY THE INTENDED PURPOSE IN PDM ("FOR" ATTRIBUTE)

SIZE	DRAWING NUMBER	REV	BLDG	AREA
A0	67212MEDH231	-	110	-
			UNITS: mm	
SCALE: 1:1	INITIAL REL DATE XX/XX/XX	SHEET 1 OF 1	DISCIPLINE MECHANICAL	

PRO/E VERSION: 18.0

67212MEDH231 A0

NAME:18:EA ON:SC1:4212(MEDH231) DATE:20-04-08 10:32:22