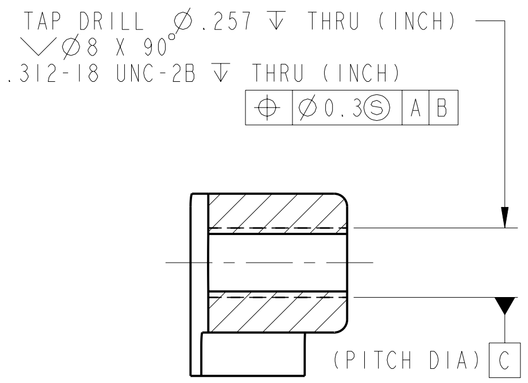

SECTION **A-A**

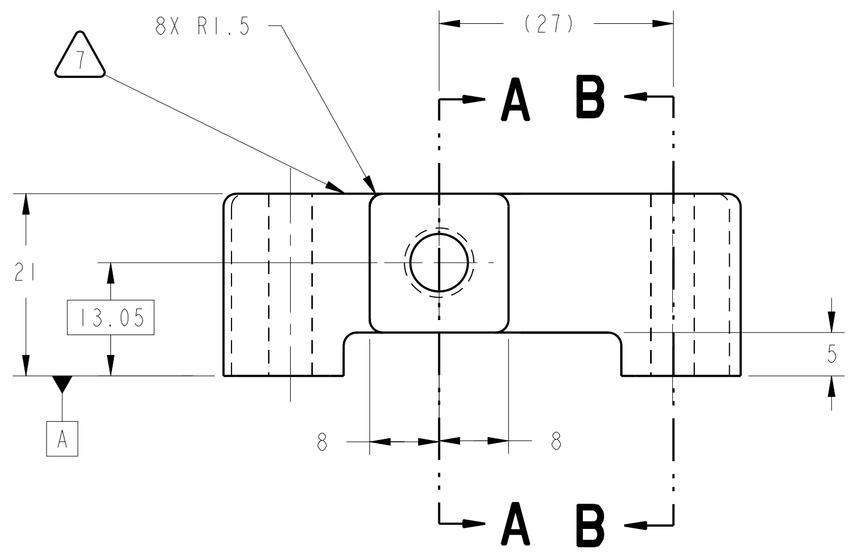

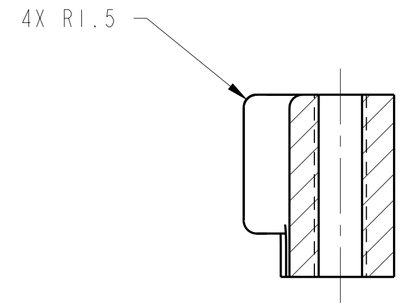

SECTION **B-B**

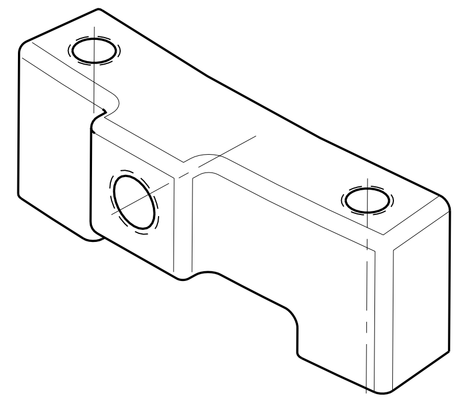

ISO VIEW

SCALE: 2/1

1. MATERIAL: 304 STAINLESS STEEL PER FEDERAL SPEC QQ-S-763.
2. CERTIFICATE OF CONFORMANCE REQUIRED FOR MATERIAL.
3. ULTRASONIC INSPECT PER MIL-STD-2154, PRIOR TO FABRICATION. ACCEPTANCE PER SECTION 5.5.4., TABLE VI, CLASS LEVEL A.
4. FINISHED PART MUST PASS DYE PENETRANT INSPECTION PER ASME E1417. ACCEPTANCE PER MIL-STD-1907.
5. 1.6 Ra ALL MACHINED SURFACES PER ANSI/ASME B46.1.
6. ALL FILLET RADII TO BE 6 mm UNLESS OTHERWISE SPECIFIED.
7. ELECTROCHEMICAL ETCH DRAWING PART NUMBER 67212MEDH227 ON SPECIFIED SURFACE PER SAE AS478, METHOD 7A.
8. CLEAN AND PASSIVATE PER MIL-S-5002, PARAGRAPHS 3.4.2.4 AND 3.4.2.4.1 AND FEDERAL SPECIFICATION QQ-P-35.
9. CLEAN SURFACES WITH 190 PROOF ETHYL ALCOHOL. WIPE WITH CLEAN COTTON SWABS AND/OR LINT-FREE CLOTH.
10. BEFORE STORAGE, PROTECT WITH CONTAMINATION BARRIER. USE CLEAN, NEW, TRANSPARENT, POLYETHYLENE BAG FOR SMALL ITEMS, OR 4 MIL THICK MINIMUM POLYETHYLENE SHEET SEALED WITH FIBERGLASS PACKAGING TAPE. SEAL AND MARK WITH IDENTIFICATION NUMBER ON TAG ATTACHED TO BAG.
11. PROCESS PLAN REQUIRED.
12. ESTIMATED WEIGHT=0.084 Kg.

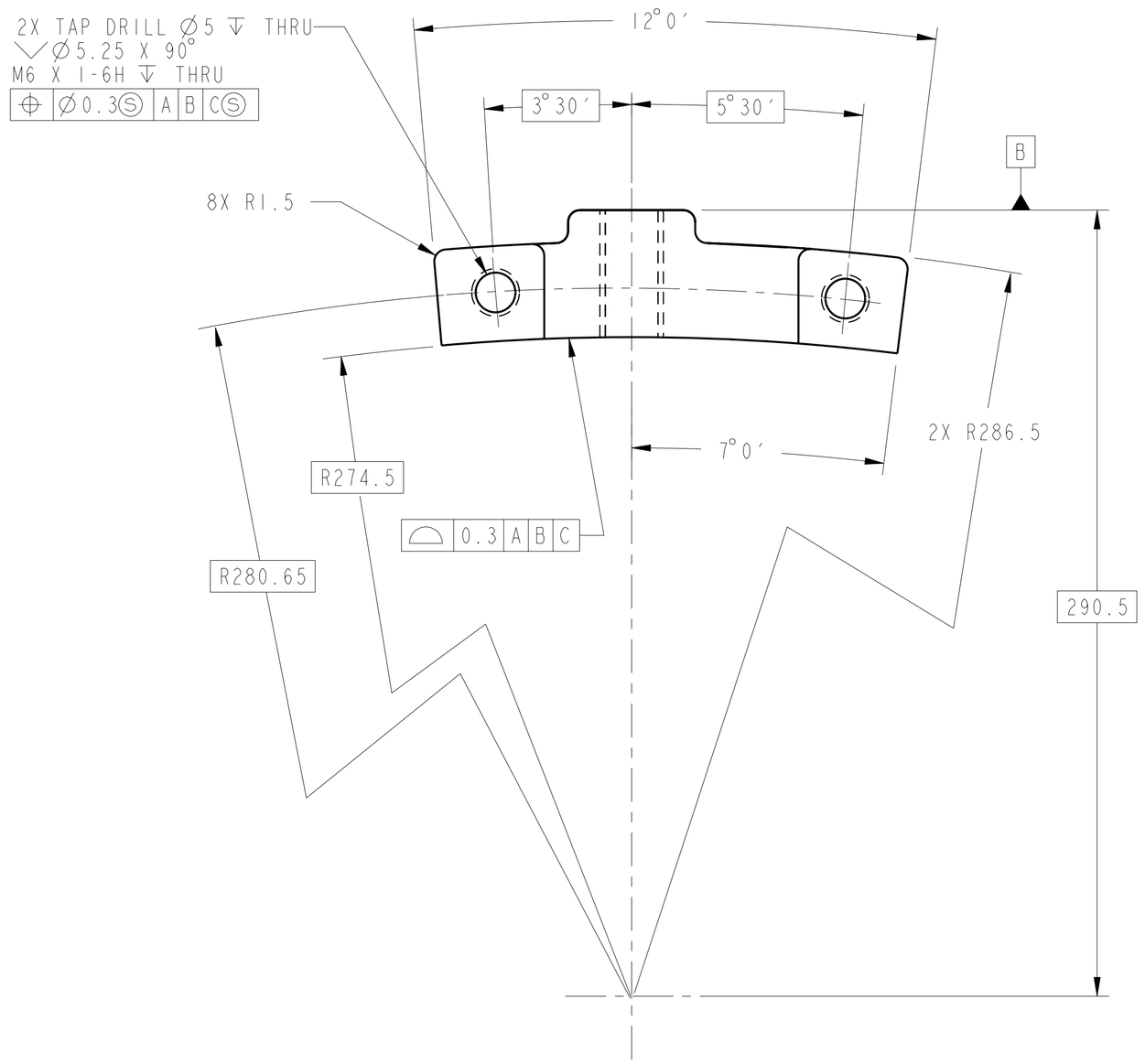

CHG	ZONE	DESCRIPTION	APP/DATE

REVISIONS

UNLESS OTHERWISE SPECIFIED:
1. ALL DIMENSIONING AND TOLERANCING PER ASME Y14.5M-1994
2. ALL DIMENSIONS ARE IN MILLIMETERS
3. BREAK EDGES: 0.2-0.5
4. LINEAR TOLERANCES:
   - 0.5-6 ±0.1
   - OVER 6-30 ±0.2
   - OVER 30-120 ±0.3
   - OVER 120-315 ±0.5
   - OVER 315-1000 ±0.8
   - OVER 1000-2000 ±1.2
5. ANGULAR TOLERANCES: 0° 30′

CONTRACT	NAS3-27600
CONTRACTOR	ADF, INC.
TASK ORDER	60
DRAFTER	ADF/ N.MCMASTER
ENGINEER	ANLX/ M.POLITI
DESIGNER	ADF/ J.IMBURGIA

THIRD ANGLE PROJECTION

NATIONAL AERONAUTICS AND SPACE ADMINISTRATION
JOHN H. GLENN RESEARCH CENTER
LEWIS FIELD
CLEVELAND, OHIO

TEST CHAMBER MODULE ASSEMBLY

67212MEDH200

227 DETENT PIN BRACKET

PDM REL LEVEL: **BASELINE** PDM REVISION: **x.9**
PDM DATABASE: **FCF**
MODEL NAME: **DETENT_PIN_BRKT**
PRIOR TO USE VERIFY THE INTENDED PURPOSE IN PDM ("FOR" ATTRIBUTE)

SIZE	DRAWING NUMBER	REV	BLDG	AREA
A1	67212MEDH227	-	333	-
			UNITS: mm	
SCALE: 2:1	INITIAL REL DATE 06/16/99	SHEET 1 OF 1	DISCIPLINE MECHANICAL	

PRO/E VERSION: 19.0

SIZE A1 DRAWING NUMBER 67212MEDH227 REV -

NAME:EDJEN OBJECT:67212MEDH227 DATE:30-Oct-00 10:31:18