1. MATERIAL: 304 STAINLESS STEEL PER FEDERAL SPEC QQ-S-766.

2. CERTIFICATE OF CONFORMANCE REQUIRED FOR MATERIAL.

3. 1.6 Ra ALL OVER.

4. CLEAN AND PASSIVATE PER MIL-S-5002, PARAGRAPHS 3.4.2.4 AND 3.4.2.4.1 AND FEDERAL SPECIFICATION QQ-P-35.

5. CLEAN SURFACES WITH 190 PROOF ETHYL ALCOHOL. WIPE WITH CLEAN COTTON SWABS AND/OR LINT-FREE CLOTH.

6. HANDLE WITH CLEAN, LINT-FREE GLOVES.

7. BEFORE STORAGE, PROTECT WITH CONTAMINATION BARRIER. USE CLEAN, NEW, TRANSPARENT, POLYETHYLENE BAG FOR SMALL ITEMS, OR 4 MIL THICK MINIMUM POLYETHYLENE SHEET SEALED WITH FIBERGLASS PACKAGING TAPE. SEAL AND MARK WITH IDENTIFICATION NUMBER ON TAG ATTACHED TO BAG.

8. PROCESS PLAN REQUIRED.

9. ESTIMATED WEIGHT: 10.001 Kg.

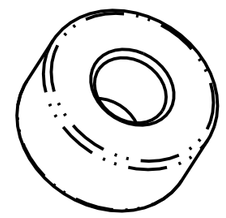

ISO VIEW

(TANGENT EDGE LINES SHOWN IN PHANTOM)
SCALE 5:1

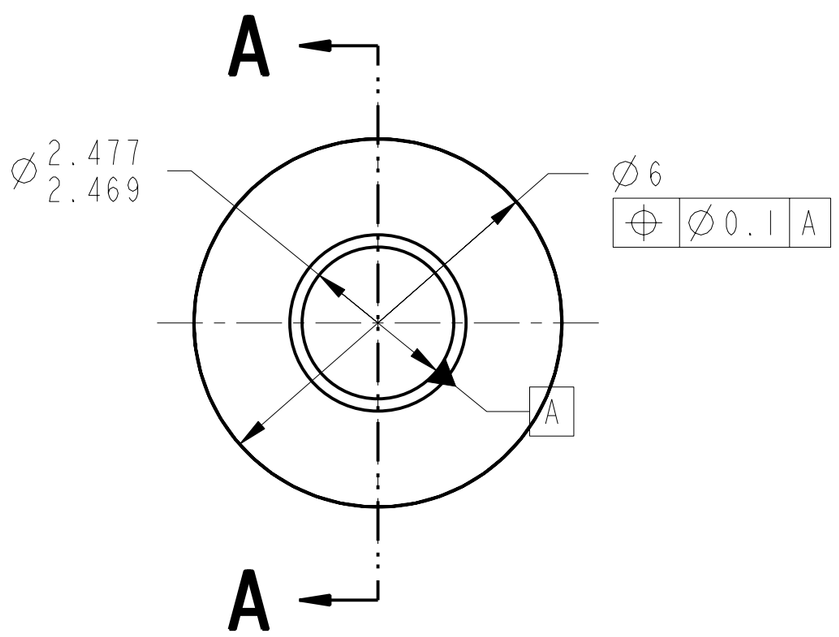

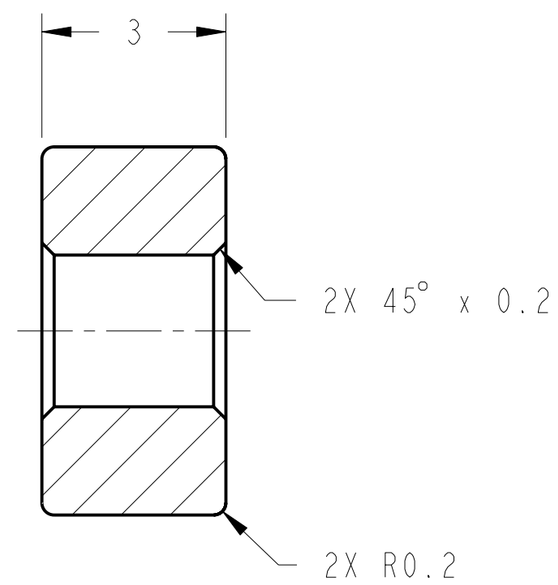

SECTION **A-A**

CHG	ZONE	DESCRIPTION	APP/DATE

REVISIONS

UNLESS OTHERWISE SPECIFIED:

1. ALL DIMENSIONING AND TOLERANCING PER ASME Y14.5M-1994
2. ALL DIMENSIONS ARE IN MILLIMETERS
3. BREAK EDGES: 0.2-0.5
4. LINEAR TOLERANCES:
   - 0.5-6 ±0.1
   - OVER 6-30 ±0.2
   - OVER 30- 120 ±0.3
   - OVER 120-315 ±0.5
   - OVER 315-1000 ±0.8
   - OVER 1000-2000 ±1.2
5. ANGULAR TOLERANCES: 0° 30′

CONTRACT	NAS3-27600
CONTRACTOR	ADF, INC.
TASK ORDER	60
DRAFTER	ADF/ M. AYNIK
ENGINEER	ANLX/ M. POLITI
DESIGNER	ADF/ J. IMBURGIA

THIRD ANGLE PROJECTION

NATIONAL AERONAUTICS AND SPACE ADMINISTRATION
JOHN H. GLENN RESEARCH CENTER
LEWIS FIELD
CLEVELAND, OHIO

TEST CHAMBER MODULE ASSEMBLY

67212MEDH200

226 DETENT ROLLER

PDM REL LEVEL: **BASELINE** PDM REVISION: **x.6**

PDM DATABASE: **FCF**

MODEL NAME: **DETENT_ROLLER**

PRIOR TO USE VERIFY THE INTENDED PURPOSE IN PDM ("FOR" ATTRIBUTE)

SIZE	DRAWING NUMBER	REV	BLDG	AREA
A2	67212MEDH226	-	333	-
			UNITS: mm	
SCALE: 10:1	INITIAL REL DATE 05/19/99	SHEET 1 OF 1	DISCIPLINE MECHANICAL	

PRO/E VERSION: 19.0

SIZE A2 DRAWING NUMBER 67212MEDH226 REV -

NAME:EDJEN OBJECT:67212MEDH226 DATE:27-Oct-00 16:57:01