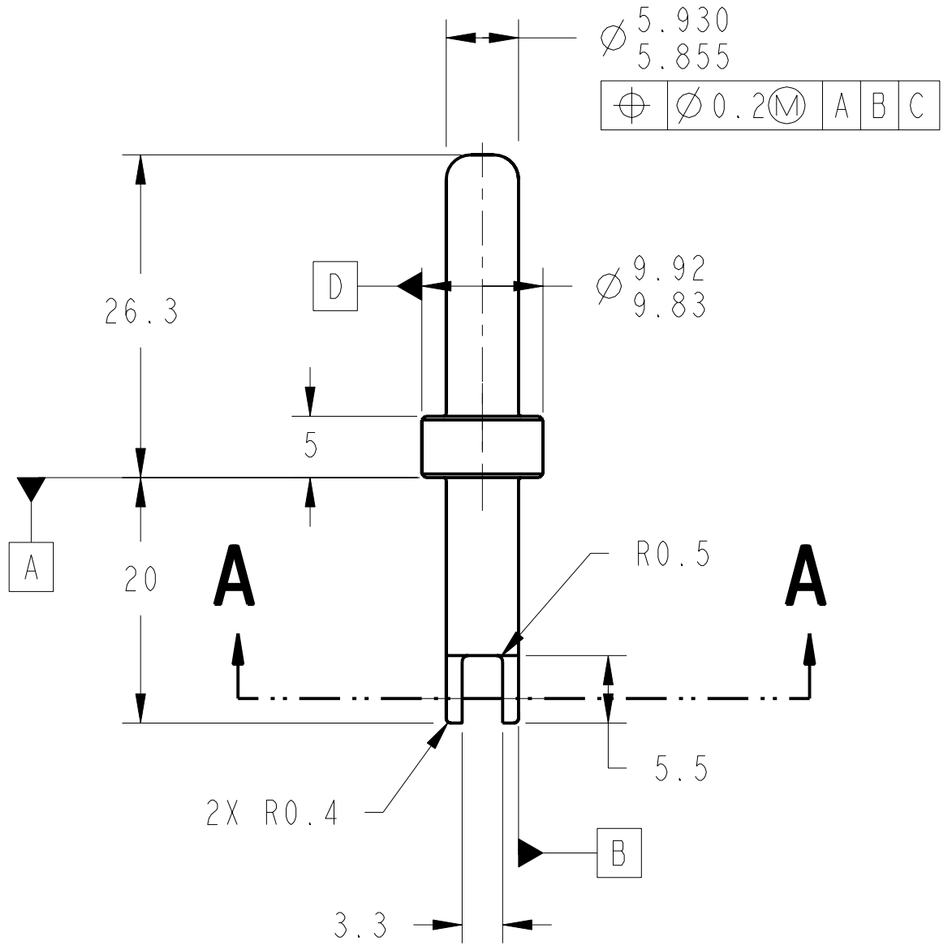

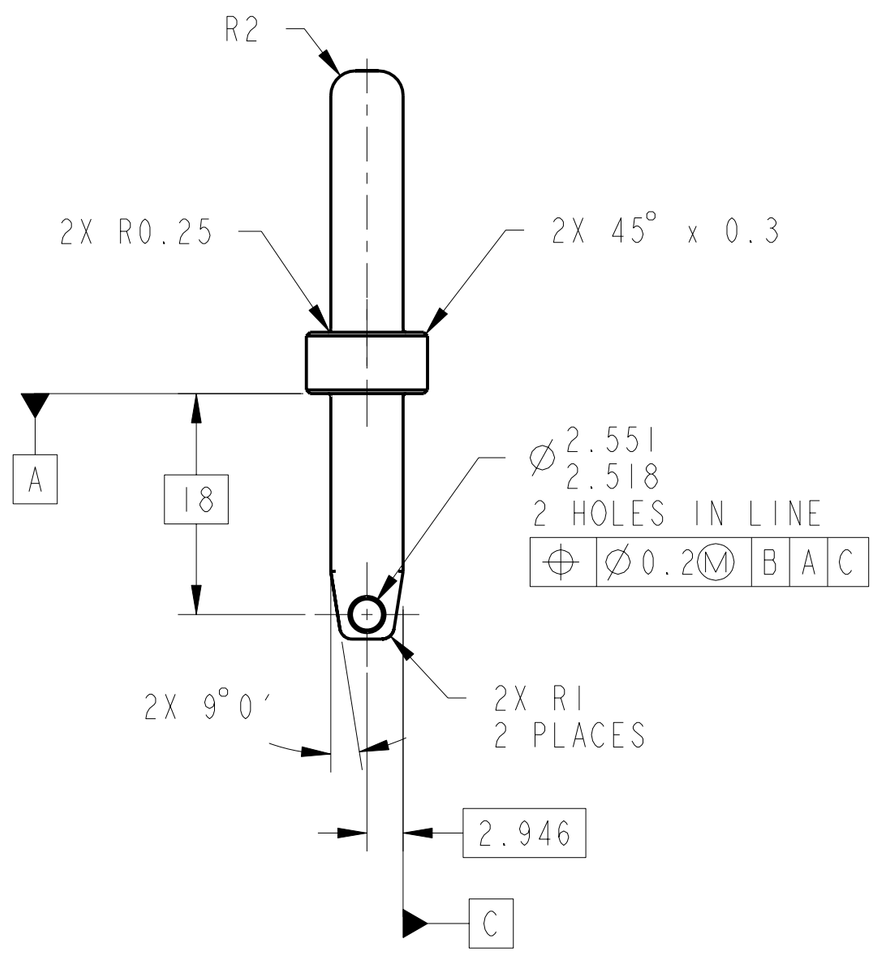

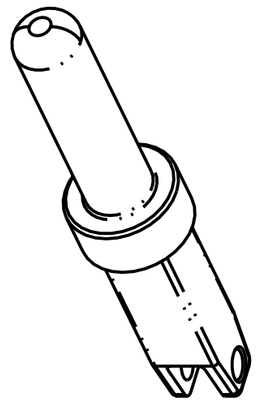

ISO VIEW I

(TANGENT EDGE LINES SHOWN IN PHANTOM)

1. MATERIAL: 6061-T6 ALUMINUM PER FEDERAL SPEC QQ-A-250/11.
2. CERTIFICATE OF CONFORMANCE REQUIRED FOR MATERIAL.
3. 1.6 Ra ALL OVER.
4. HARD ANODIZE PER MIL-A-8625, TYPE III, CLASS 2, COLOR: BLACK, .001 TO .002 INCH THICKNESS.
5. CLEAN SURFACES WITH 190 PROOF ETHYL ALCOHOL. WIPE WITH CLEAN COTTON SWABS AND/OR LINT-FREE CLOTH.
6. HANDLE WITH CLEAN, LINT-FREE GLOVES.
7. BEFORE STORAGE, PROTECT WITH CONTAMINATION BARRIER. USE CLEAN, NEW, TRANSPARENT, POLYETHYLENE BAG FOR SMALL ITEMS, OR 4 MIL THICK MINIMUM POLYETHYLENE SHEET SEALED WITH FIBERGLASS PACKAGING TAPE. SEAL AND MARK WITH IDENTIFICATION NUMBER ON TAG ATTACHED TO BAG.
8. ESTIMATED WEIGHT: 0.004 Kg.
9. PROCESS PLAN REQUIRED

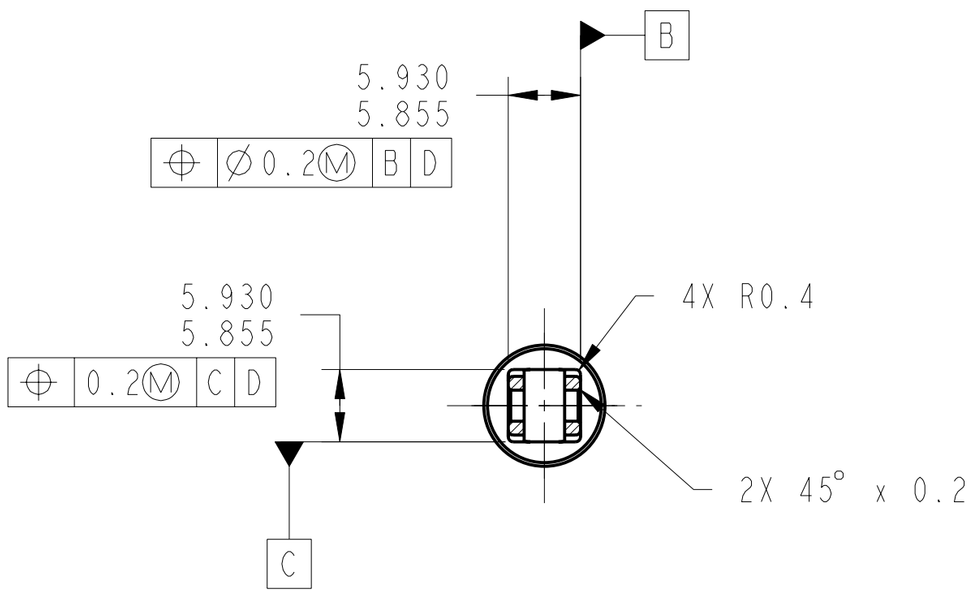

SECTION A-A

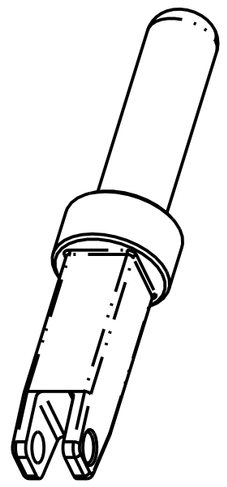

ISO VIEW II

(TANGENT EDGE LINES SHOWN IN PHANTOM)

CHG	ZONE	DESCRIPTION	APP/DATE

REVISIONS

UNLESS OTHERWISE SPECIFIED:

1. ALL DIMENSIONING AND TOLERANCING PER ASME Y14.5M-1994
2. ALL DIMENSIONS ARE IN MILLIMETERS
3. BREAK EDGES: 0.2-0.5
4. LINEAR TOLERANCES:
   - 0.5-6 ±0.1
   - OVER 6-30 ±0.2
   - OVER 30-120 ±0.3
   - OVER 120-315 ±0.5
   - OVER 315-1000 ±0.8
   - OVER 1000-2000 ±1.2
5. ANGULAR TOLERANCES: 0° 30′

CONTRACT	NAS3-27600
CONTRACTOR	ADF, INC.
TASK ORDER	60
DRAFTER	ADF/ M. AYNIK
ENGINEER	ANLX/ M. POLITI
DESIGNER	ADF/ J. IMBURGIA

THIRD ANGLE PROJECTION

NATIONAL AERONAUTICS AND SPACE ADMINISTRATION
JOHN H. GLENN RESEARCH CENTER
LEWIS FIELD
CLEVELAND, OHIO

TEST CHAMBER MODULE ASSEMBLY

67212MEDH200

224 ARM DETENT PIN

PDM REL LEVEL: **BASELINE** PDM REVISION: x.7

PDM DATABASE: FCF

MODEL NAME: ARM_DETENT_PIN

PRIOR TO USE VERIFY THE INTENDED PURPOSE IN PDM ("FOR" ATTRIBUTE)

SIZE	DRAWING NUMBER	REV	BLDG	AREA
A2	67212MEDH224	-	333	-
			UNITS: mm	

SCALE:	INITIAL REL DATE	SHEET	DISCIPLINE
2:1	06/16/99	1 OF 1	MECHANICAL

PRO/E VERSION: 19.0

REV -

DRAWING NUMBER 67212MEDH224

SIZE A2

NAME:EDJEN OBJECT:67212MEDH224 DATE:27-Oct-00 16:56:03