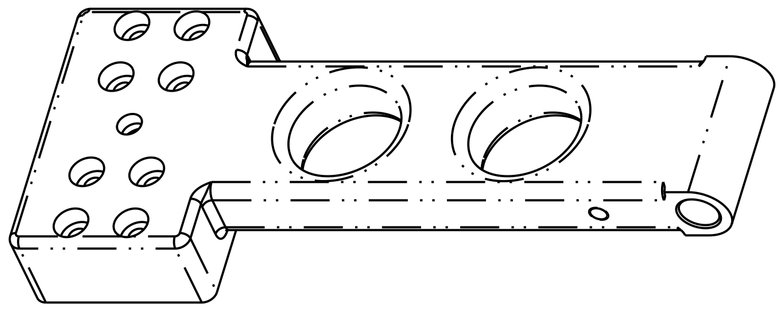

ISO VIEW I
(TANGENT EDGE LINES SHOWN IN PHANTOM)

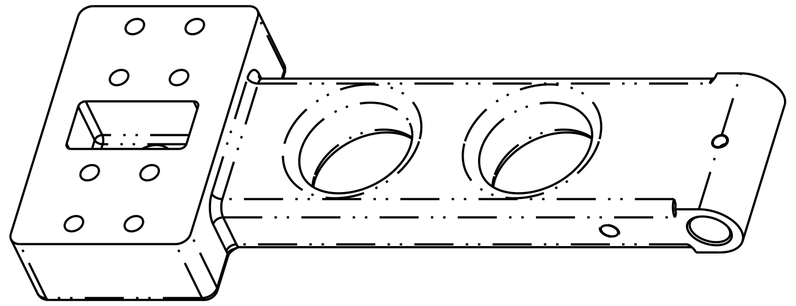

ISO VIEW II
(TANGENT EDGE LINES SHOWN IN PHANTOM)

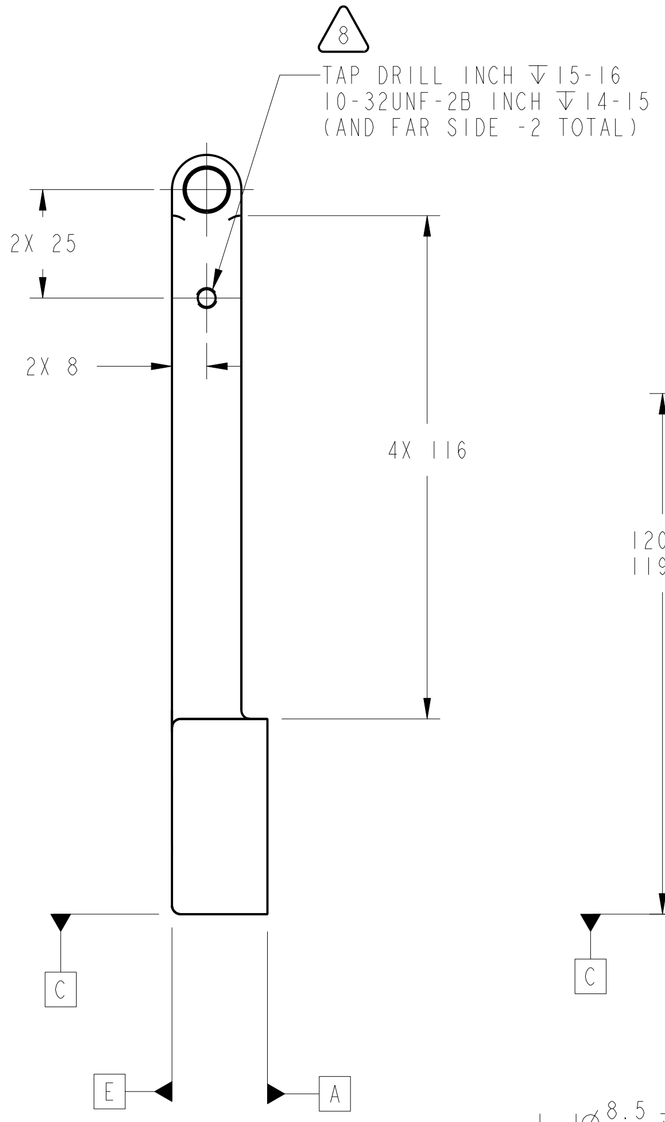

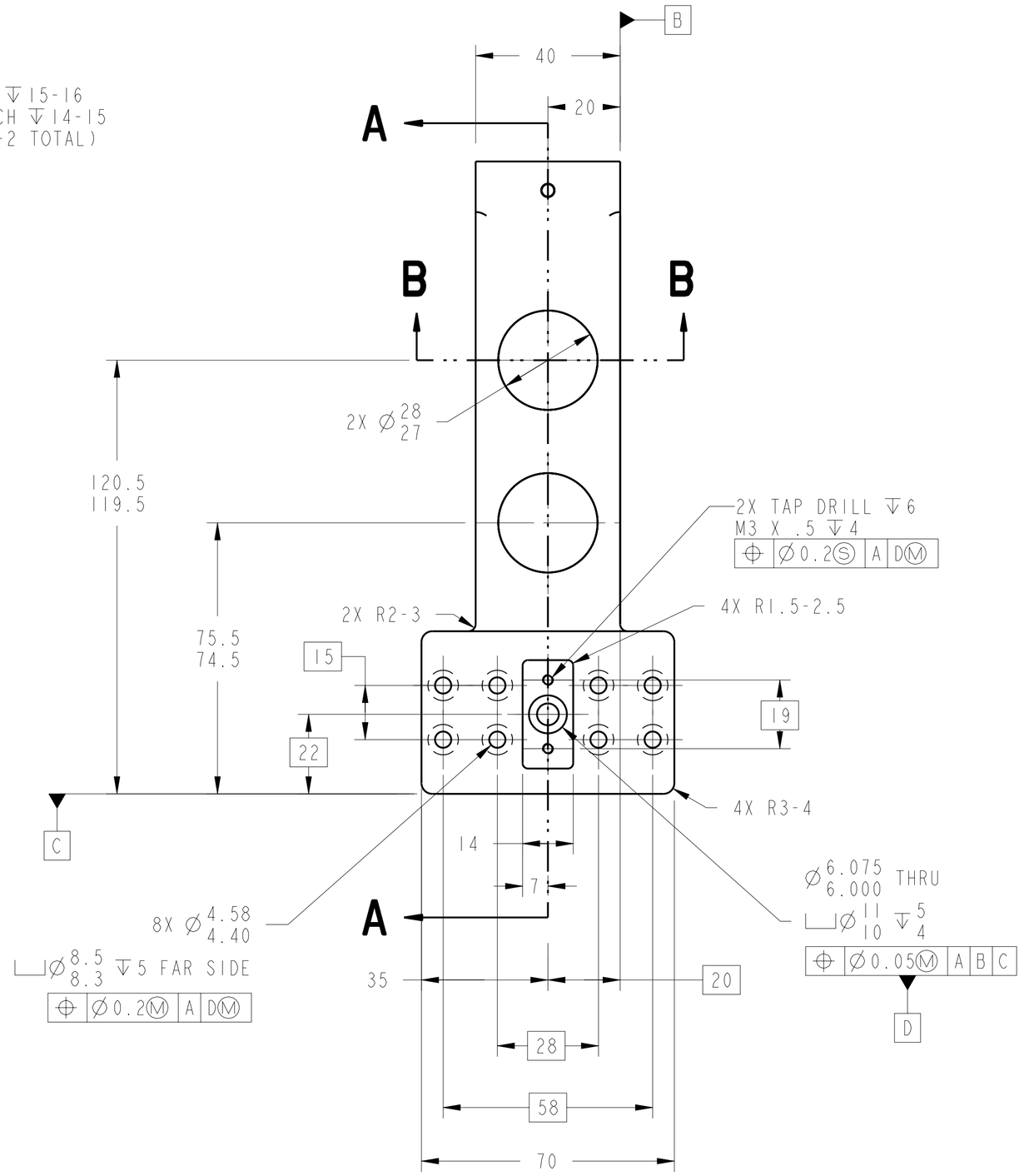

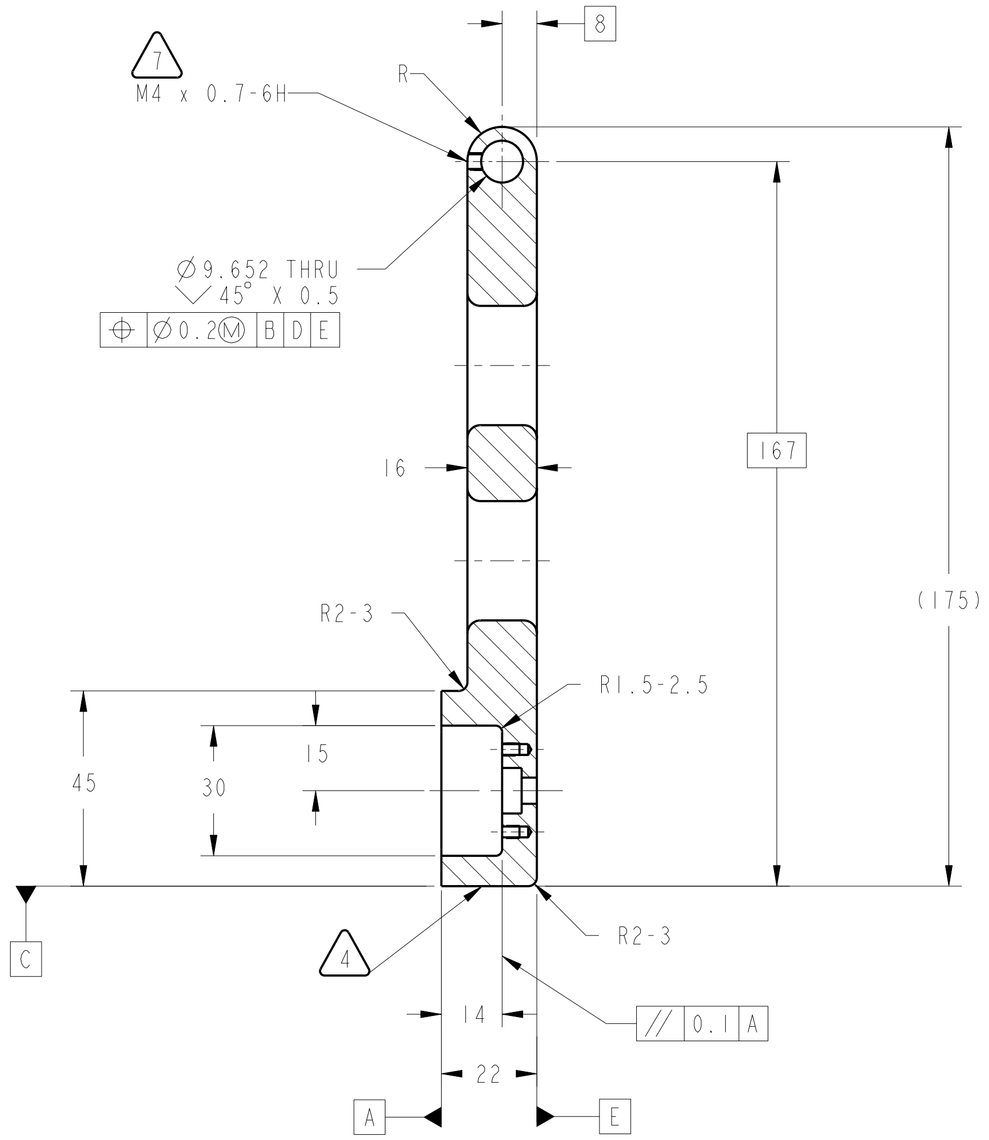

SECTION A-A

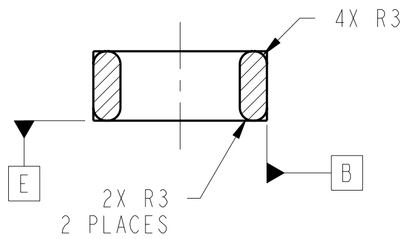

SECTION B-B

1. MATERIAL: 6061-T6 ALUMINUM PER FEDERAL SPEC QQ-A-250/11.
2. CERTIFICATE OF CONFORMANCE REQUIRED FOR MATERIAL.
3. 1.6 Ra ALL OVER.
4. ELECTROCHEMICAL ETCH DRAWING PART NUMBER 67212MEDH222 ON SPECIFIED SURFACE PER SAE AS478, METHOD 7A (ZONE B/C3).
5. HARD ANODIZE PER MIL-A-8625, TYPE III, CLASS 2, COLOR: BLACK, .001-.002 INCH THICKNESS.
6. DO NOT BLACK ANODIZE TAPPED HOLES.
7. INSTALL KEENSERT KNCML 2X0.4 PER MANUFACTURER'S SPECIFICATIONS AFTER SURFACE TREATMENT PER NOTE 5 AND 6.
8. INSTALL CARR LANE STAINLESS SHORT SPRING PLUNGER CL-31-SSPN-2 PER MANUFACTURER'S SPECIFICATIONS AFTER SURFACE TREATMENT PER NOTE 5.
9. CLEAN SURFACES WITH 190 PROOF ETHYL ALCOHOL. WIPE WITH CLEAN COTTON SWABS AND/OR LINT-FREE CLOTH.
10. HANDLE WITH CLEAN, LINT-FREE GLOVES.
11. BEFORE STORAGE, PROTECT WITH CONTAMINATION BARRIER. USE CLEAN, NEW, TRANSPARENT, POLYETHYLENE BAG FOR SMALL ITEMS, OR 4 MIL THICK MINIMUM POLYETHYLENE SHEET SEALED WITH FIBERGLASS PACKAGING TAPE. SEAL AND MARK WITH IDENTIFICATION NUMBER ON TAG ATTACHED TO BAG.
12. ESTIMATED WEIGHT: 0.316 Kg.
13. PROCESS PLAN REQUIRED

CHG	ZONE	DESCRIPTION	APP/DATE

REVISIONS

UNLESS OTHERWISE SPECIFIED:
1. ALL DIMENSIONING AND TOLERANCING PER ASME Y14.5M-1994
2. ALL DIMENSIONS ARE IN MILLIMETERS
3. BREAK EDGES: 0.2-0.5
4. LINEAR TOLERANCES:
   0.5-6 ±0.1
   OVER 6-30 ±0.2
   OVER 30-120 ±0.3
   OVER 120-315 ±0.5
   OVER 315-1000 ±0.8
   OVER 1000-2000 ±1.2
5. ANGULAR TOLERANCES: 0° 30′

CONTRACT	NAS3-27600
CONTRACTOR	ADF, INC.
TASK ORDER	60
DRAFTER	ADF/ M. AYNIK
ENGINEER	ANLX/ M. POLITI
DESIGNER	ADF/ J. IMBURGIA

THIRD ANGLE PROJECTION

NATIONAL AERONAUTICS AND SPACE ADMINISTRATION
JOHN H. GLENN RESEARCH CENTER
LEWIS FIELD
CLEVELAND, OHIO

TEST CHAMBER MODULE ASSEMBLY
67212MEDH200

222 CHAMBER ARM LINEAR

PDM REL LEVEL: BASELINE PDM REVISION: x.15
PDM DATABASE: FCF
MODEL NAME: CHAMBER_ARM_LINEAR
PRIOR TO USE VERIFY THE INTENDED PURPOSE IN PDM ("FOR" ATTRIBUTE)

SIZE	DRAWING NUMBER	REV	BLDG	AREA
A1	67212MEDH222	X	333	-
SCALE: 1:1	INITIAL REL DATE XX/XX/XX	SHEET 1 OF 1	UNITS: mm	DISCIPLINE MECHANICAL

PRO/E VERSION: 18.0

REV X
DRAWING NUMBER 67212MEDH222
SIZE A1

NAME:EDJEN OBJECT:67212MEDH222 DATE:30-Oct-00 13:37:14