1. MATERIAL:
   TYPE 316 STAINLESS STEEL PER FEDERAL SPEC QQ-S-763.
2. CERTIFICATE OF CONFORMANCE REQUIRED FOR MATERIAL.
3. 0.8 Ra ALL MACHINED SURFACES PER ANSI/ASME B46.1.
4. IDENTIFY BY TAGGING WITH DRAWING PART NUMBER 67212MEDH218, PER SAE AS478, METHOD 35.
5. CLEAN AND PASSIVATE PER MIL-S-5002, PARAGRAPHS 3.4.2.4 AND 3.4.2.4.1 AND FEDERAL SPECIFICATION QQ-P-35.
6. CLEAN SURFACES WITH 190 PROOF ETHYL ALCOHOL. WIPE WITH CLEAN COTTON SWABS AND/OR LINT-FREE CLOTH.
7. HANDLE WITH CLEAN, LINT-FREE GLOVES.
8. BEFORE STORAGE, PROTECT WITH CONTAMINATION BARRIER. USE CLEAN, NEW, TRANSPARENT, POLYETHYLENE BAG. SEAL WITH FIBERGLASS PACKAGING TAPE. SEAL AND MARK WITH IDENTIFICATION NUMBER ON TAG ATTACHED TO BAG.
9. PROCESS PLAN REQUIRED.
10. ESTIMATED WEIGHT= 0.072 Kg.

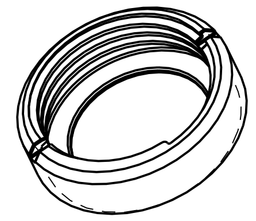

ISO VIEW

SCALE 1:1

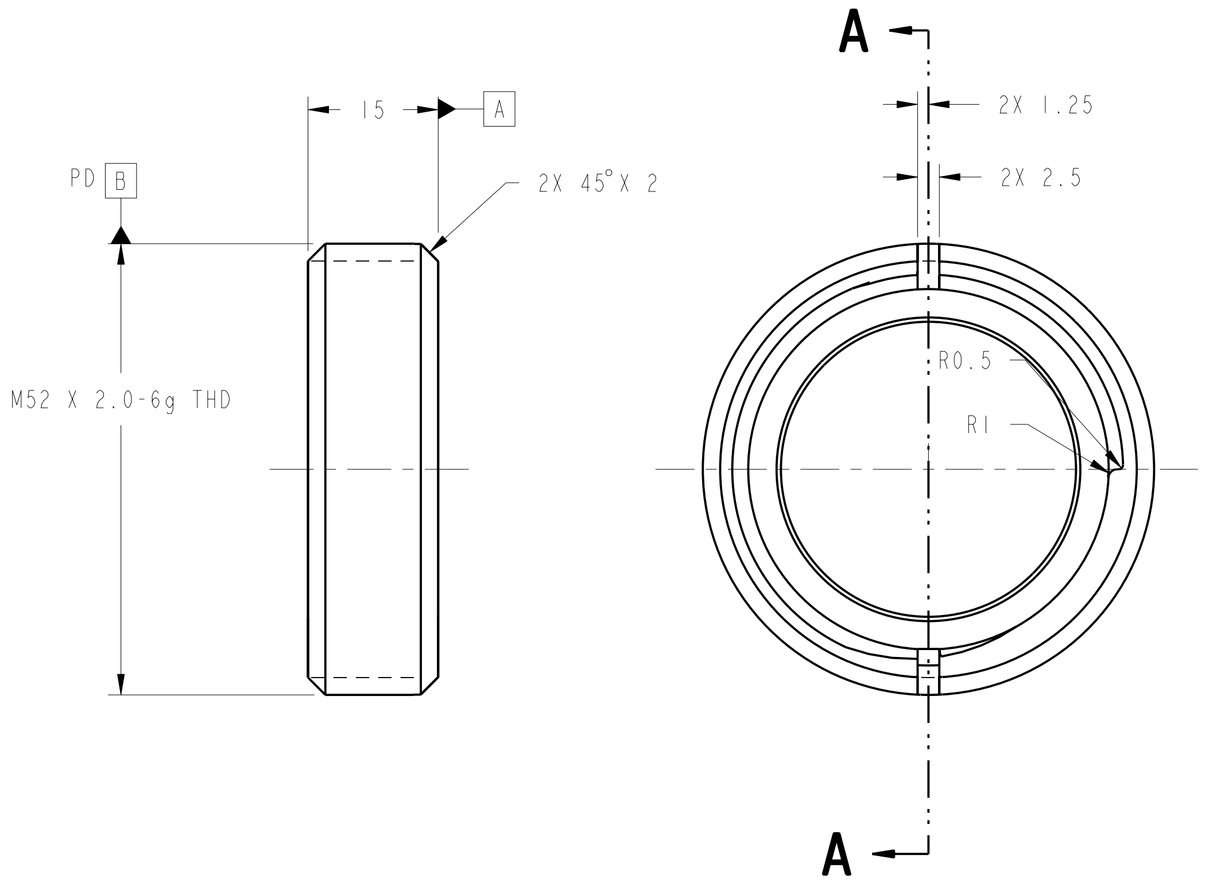

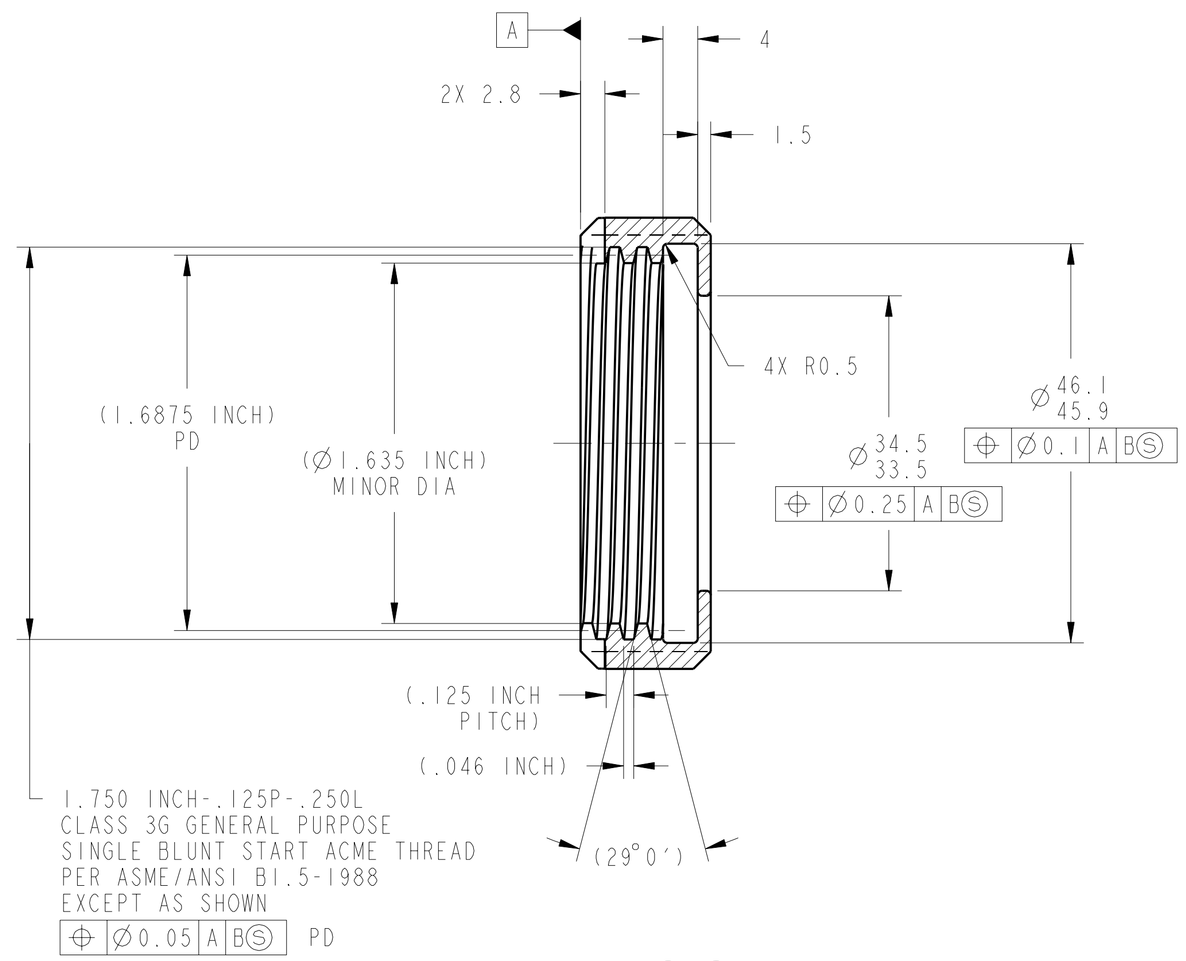

SECTION A-A

CHG	ZONE	DESCRIPTION	APP/DATE

REVISIONS

UNLESS OTHERWISE SPECIFIED:
1. ALL DIMENSIONING AND TOLERANCING PER ASME Y14.5M-1994
2. ALL DIMENSIONS ARE IN MILLIMETERS
3. BREAK EDGES: 0.2-0.5
4. LINEAR TOLERANCES:
   0.5-6 ±0.1
   OVER 6-30 ±0.2
   OVER 30-120 ±0.3
   OVER 120-315 ±0.5
   OVER 315-1000 ±0.8
   OVER 1000-2000 ±1.2
5. ANGULAR TOLERANCES: 0° 30′

CONTRACT	NAS3-27600
CONTRACTOR	ADF, INC.
TASK ORDER	60
DRAFTER	ADF/D.ROBINSON
ENGINEER	ANLX/D.CATALANO
DESIGNER	ADF/D.ROBINSON

THIRD ANGLE PROJECTION

NATIONAL AERONAUTICS AND SPACE ADMINISTRATION
JOHN H. GLENN RESEARCH CENTER
LEWIS FIELD
CLEVELAND, OHIO

INTERFACE RESOURCE RING ASSEMBLY

67212MELH220

218 FILTER RETAINING SLEEVE

PDM REL LEVEL: RELEASE PDM REVISION: x.5
PDM DATABASE: FCF
MODEL NAME: 67212MEDH218
PRIOR TO USE VERIFY THE INTENDED PURPOSE IN PDM ("FOR" ATTRIBUTE)

SIZE	DRAWING NUMBER	REV	BLDG	AREA
A1	67212MEDH218	-	333	-
			UNITS: mm	
SCALE: 2:1 AND NOTED	INITIAL REL DATE XX/XX/XX	SHEET 1 OF 1	DISCIPLINE MECHANICAL	

SIZE A1 DRAWING NUMBER 67212MEDH218 REV -

PRO/E VERSION: 19.0

NAME:EDJEN OBJECT:67212MEDH218 DATE:27-Oct-00 16:34:02