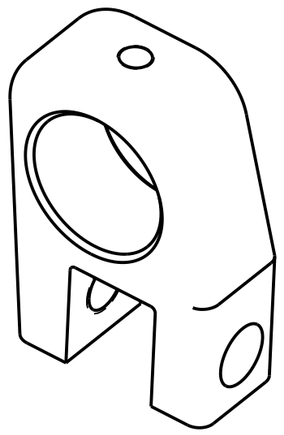

ISO VIEW

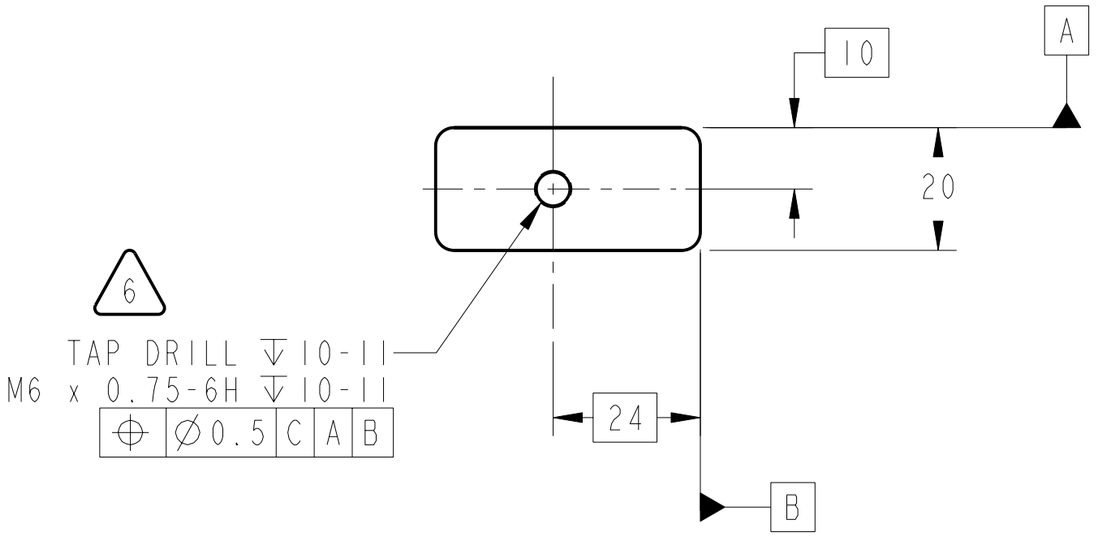

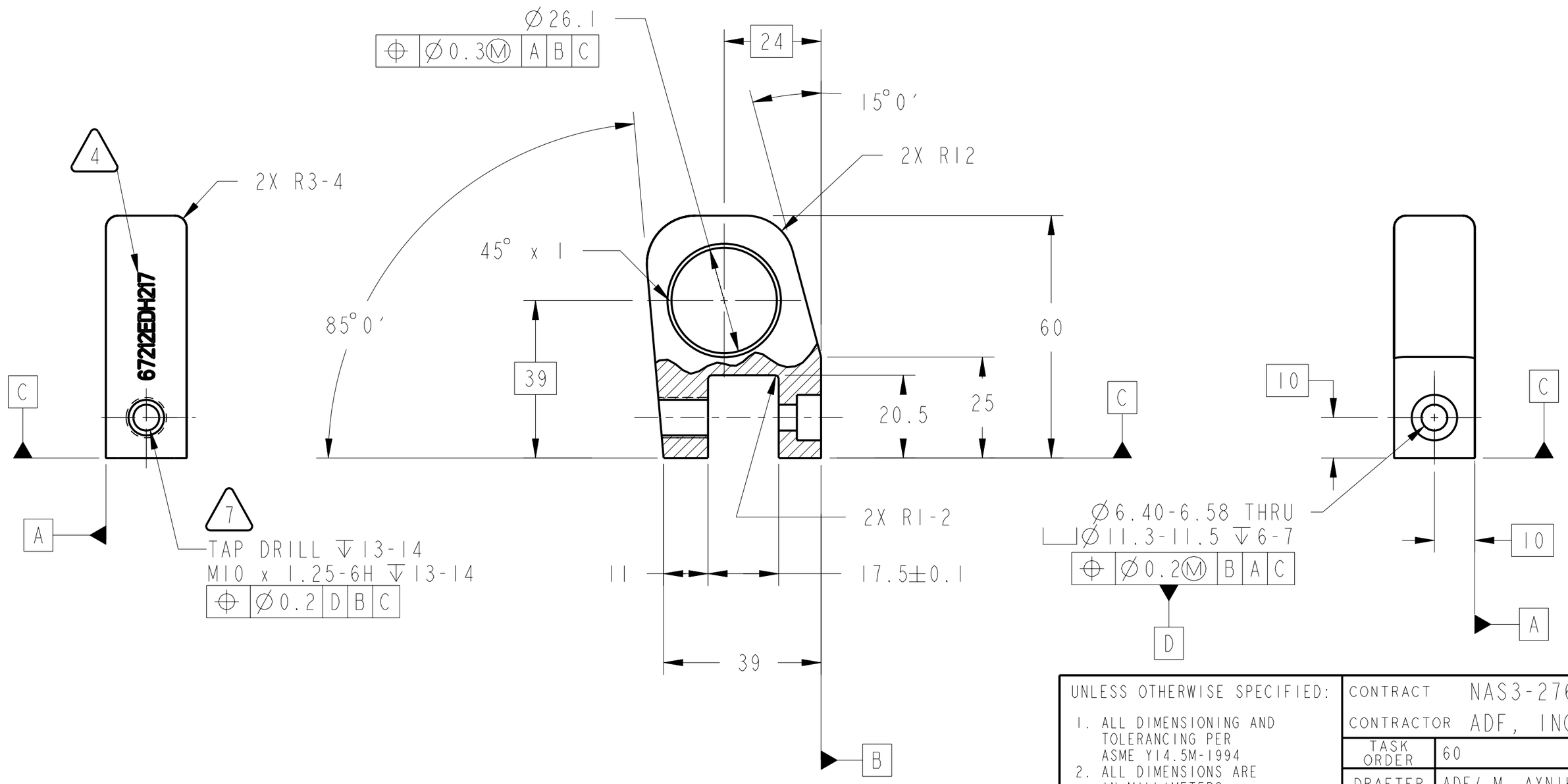

1. MATERIAL: 6061-T6 ALUMINUM PER FEDERAL SPEC QQ-A-250/11.
2. CERTIFICATE OF CONFORMANCE REQUIRED FOR MATERIAL.
3. 1.6 Ra ALL OVER PER ANSI/ASME B46.1.
4. ELECTROCHEMICAL ETCH DRAWING PART NUMBER 67212MEDH217 ON SPECIFIED SURFACE PER SAE AS478, METHOD 7A (ZONE B6).
5. HARD ANODIZE PER MIL-A-8625, TYPE III, CLASS 2, BLUE, STANDARD THICKNESS.
6. INSTALL KEENSERT INSERT NO. KNCML 4X0.7 PER MANUFACTURER'S SPECIFICATIONS AFTER SURFACE TREATMENT PER NOTE 4.
7. INSTALL KEENSERT INSERT NO. KNML 6X 1.0 PER MANUFACTURER'S SPECIFICATIONS AFTER SURFACE TREATMENT PER NOTE 4.
8. CLEAN SURFACES WITH 190 PROOF ETHYL ALCOHOL. WIPE WITH CLEAN COTTON SWABS AND/OR LINT-FREE CLOTH.
9. HANDLE WITH CLEAN, LINT-FREE GLOVES.
10. BEFORE STORAGE, PROTECT WITH CONTAMINATION BARRIER. USE CLEAN, NEW, TRANSPARENT, POLYETHYLENE BAG FOR SMALL ITEMS, OR 4 MIL THICK MINIMUM POLYETHYLENE SHEET SEALED WITH FIBERGLASS PACKAGING TAPE. SEAL AND MARK WITH IDENTIFICATION NUMBER ON TAG ATTACHED TO BAG.
11. PROCESS PLAN REQUIRED.
12. ESTIMATED WEIGHT = 0.069 Kg.

CHG	ZONE	DESCRIPTION	APP/DATE
A	C1	KNML 6X1.0 WAS 6X0.75	JAI 06/25/99

REVISIONS

UNLESS OTHERWISE SPECIFIED:

1. ALL DIMENSIONING AND TOLERANCING PER ASME Y14.5M-1994
2. ALL DIMENSIONS ARE IN MILLIMETERS
3. BREAK EDGES: 0.2-0.5
4. LINEAR TOLERANCES:
   - 0.5-6 ±0.1
   - OVER 6-30 ±0.2
   - OVER 30-120 ±0.3
   - OVER 120-315 ±0.5
   - OVER 315-1000 ±0.8
   - OVER 1000-2000 ±1.2
5. ANGULAR TOLERANCES: 0° 30′

CONTRACT	NAS3-27600
CONTRACTOR	ADF, INC.
TASK ORDER	60
DRAFTER	ADF/ M. AYNIK
ENGINEER	ANLX/ M. POLITI
DESIGNER	ADF/ J. IMBURGIA

THIRD ANGLE PROJECTION

NATIONAL AERONAUTICS AND SPACE ADMINISTRATION
JOHN H. GLENN RESEARCH CENTER
LEWIS FIELD
CLEVELAND, OHIO

TEST CHAMBER MODULE ASSEMBLY

67212MELH200

217 LOCKING RING HANDLE BRACKET

PDM REL LEVEL: **RELEASE** PDM REVISION: **x.9**

PDM DATABASE: **FCF**

MODEL NAME: **67212MEDH217**

PRIOR TO USE VERIFY THE INTENDED PURPOSE IN PDM ("FOR" ATTRIBUTE)

SIZE	DRAWING NUMBER	REV	BLDG	AREA
A2	67212MEDH217	A	333	-
			UNITS: mm	
SCALE: 1:1	INITIAL REL DATE 05/11/99	SHEET 1 OF 1	DISCIPLINE MECHANICAL	

PRO/E VERSION: 18.0

DRAWING NUMBER 67212MEDH217 SIZE A2 REV A

NAME:EDJEN OBJECT:67212MEDH217 DATE:27-Oct-00 16:53:40