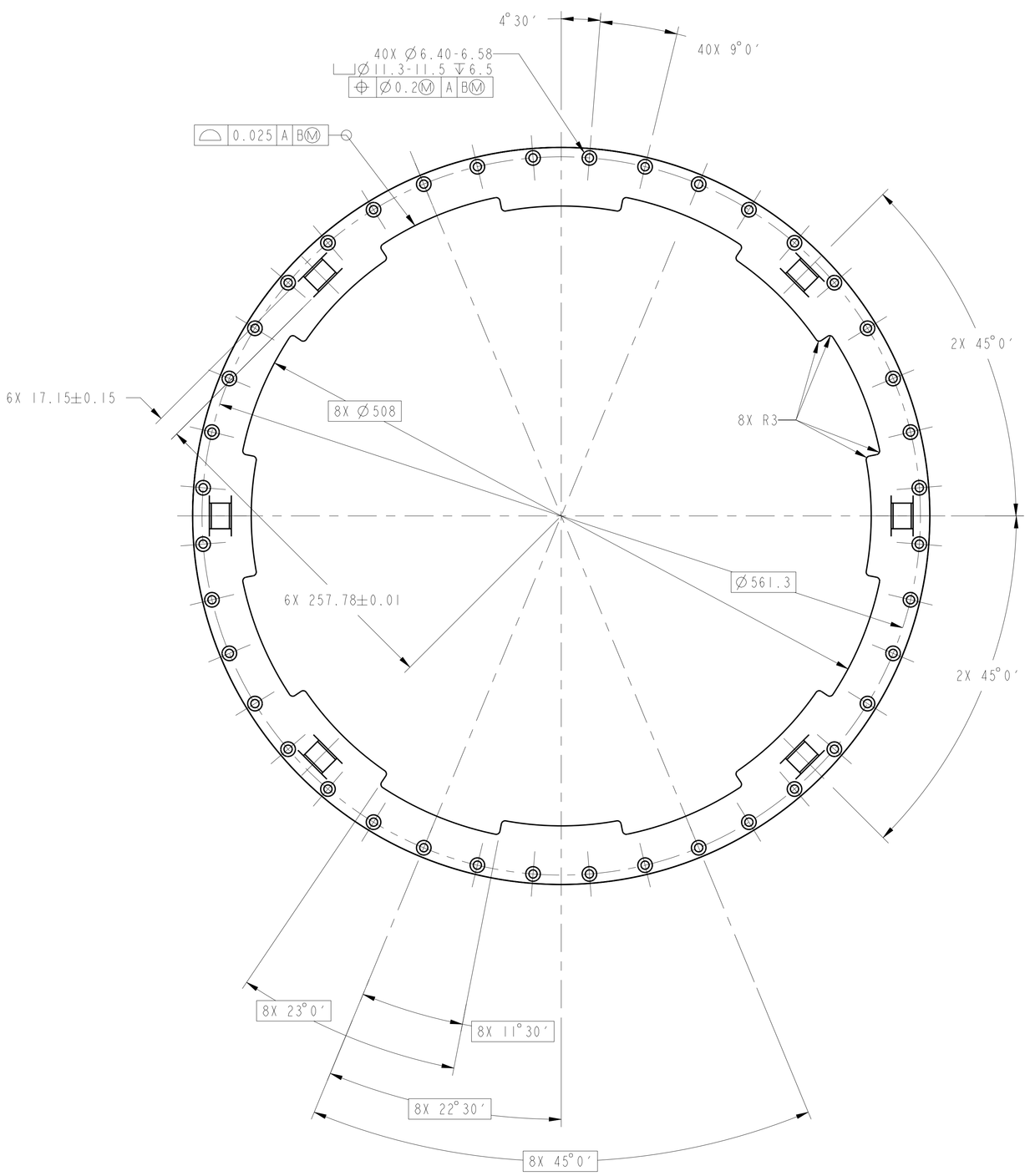

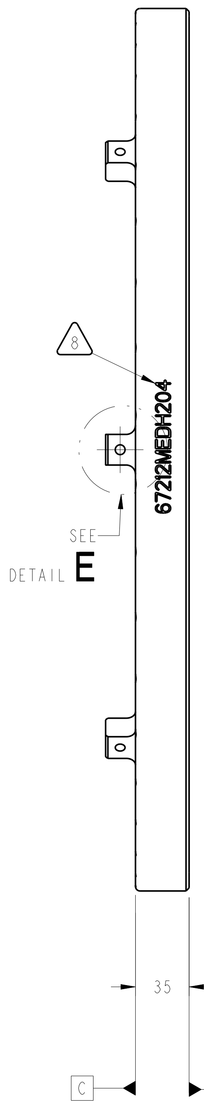

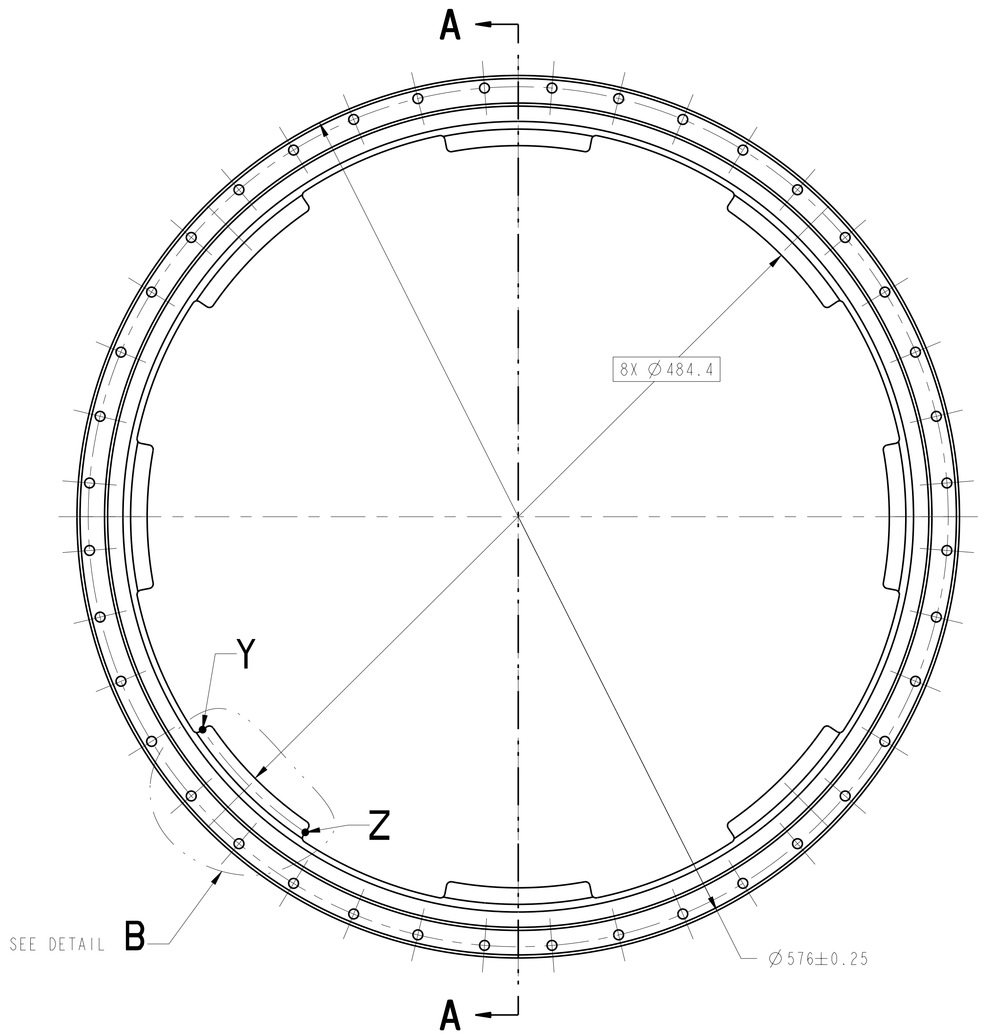

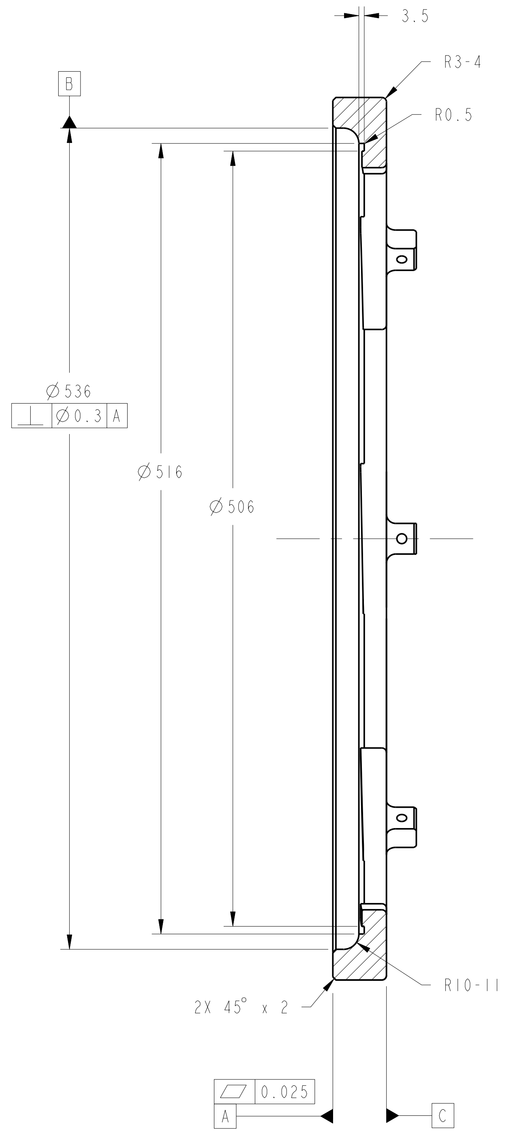

SECTION A-A

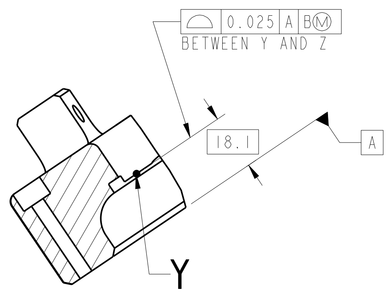

SECTION C-C

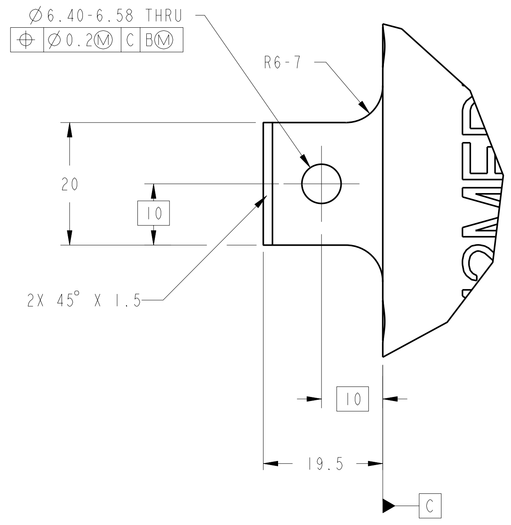

DETAIL E
6 PLACES
SCALE 2:1

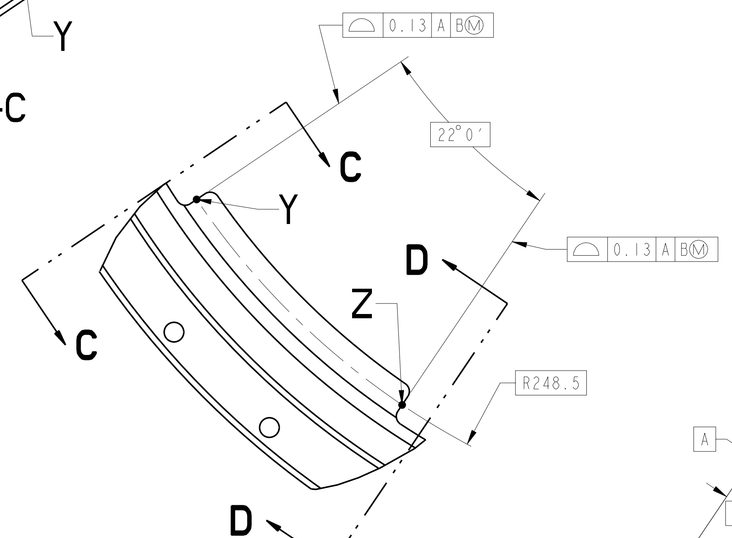

DETAIL B
8 PLACES
SCALE 1:1

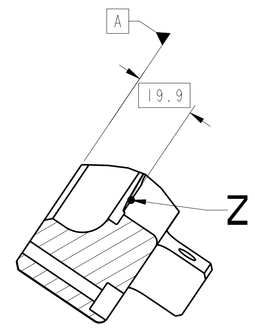

SECTION D-D

1. THIS ITEM IS FRACTURE CRITICAL.
2. MATERIAL:
   TYPE 304 STAINLESS STEEL
   PER FEDERAL SPEC QQ-S-766.
3. CERTIFICATE OF CONFORMANCE REQUIRED FOR MATERIAL.
4. ULTRASONIC INSPECT PER MIL-STD-2154, TYPE I, QUALITY LEVEL CLASS A, PRIOR TO FABRICATION. ACCEPTANCE CRITERIA PER SECTION 5.5.4 AND TABLE VI.
5. ROUGH MACHINED AND FINISHED PART MUST PASS DYE PENETRANT INSPECTION PER ASTM E1417. ACCEPTANCE PER MIL-STD-1907.
6. 1.6 Ra ALL MACHINED SURFACES PER ANSI/ASME B46.1.
7. ALL FILLET RADII TO BE 6 mm UNLESS OTHERWISE SPECIFIED.
8. ELECTROCHEMICAL ETCH DRAWING PART NUMBER 67212MEDH204 ON SPECIFIED SURFACE PER SAE AS478, METHOD 7A (ZONE F7).
9. CLEAN AND PASSIVATE PER MIL-S-5002, PARAGRAPHS 3.4.2.4 AND 3.4.2.4.1 AND FEDERAL SPECIFICATION QQ-P-35.
10. CLEAN SURFACES WITH 190 PROOF ETHYL ALCOHOL. WIPE WITH CLEAN COTTON SWABS AND/OR LINT-FREE CLOTH. HANDLE WITH CLEAN, LINT-FREE GLOVES.
11. BEFORE STORAGE, PROTECT WITH CONTAMINATION BARRIER. USE CLEAN, NEW TRANSPARENT, POLYETHYLENE BAG FOR SMALL ITEMS, OR 4 MIL THICK MINIMUM POLYETHYLENE SHEET SEALED WITH FIBERGLASS PACKAGING TAPE. SEAL AND MARK WITH IDENTIFICATION NUMBER ON TAG ATTACHED TO BAG.
12. PROCESS PLAN REQUIRED.
13. ESTIMATED WEIGHT: 13.734 Kg.

CHG	ZONE	DESCRIPTION	APP/DATE
A	F11; G11; C8, C9.	17.15±0.15 WAS 20-21; 6X 257.78±0.01 WAS 6X 258±0.25; (DETAIL E) Ø6.40-6.58 WAS Ø6.60-6.82; 19.5 WAS 20.	MJA 05/11/99

REVISIONS

UNLESS OTHERWISE SPECIFIED:
1. ALL DIMENSIONING AND TOLERANCING PER ASME Y14.5M-1994
2. ALL DIMENSIONS ARE IN MILLIMETERS
3. BREAK EDGES: 0.2-0.5
4. LINEAR TOLERANCES:
   0.5-6 ±0.1
   OVER 6-30 ±0.2
   OVER 30-120 ±0.3
   OVER 120-315 ±0.5
   OVER 315-1000 ±0.8
   OVER 1000-2000 ±1.2
5. ANGULAR TOLERANCES: 0° 30′

CONTRACT	NAS3-27600
CONTRACTOR	ADF, INC.
TASK ORDER	60
DRAFTER	ADF/ J. IMBURGIA
ENGINEER	ANLX/ M. POLITI
DESIGNER	ADF/ J. IMBURGIA

THIRD ANGLE PROJECTION

NATIONAL AERONAUTICS AND SPACE ADMINISTRATION
JOHN H. GLENN RESEARCH CENTER
LEWIS FIELD
CLEVELAND, OHIO

TEST CHAMBER MODULE ASSEMBLY
67212MELH200

204 LOCK RING

PDM REL LEVEL: RELEASE PDM REVISION: x.9
PDM DATABASE: FCF
MODEL NAME: 67212MEDH204
PRIOR TO USE VERIFY THE INTENDED PURPOSE IN PDM ("FOR" ATTRIBUTE)

SIZE	DRAWING NUMBER	REV	BLDG	AREA
A0	67212MEDH204	A	333	—
SCALE: 1:2	INITIAL REL DATE 04/23/99	SHEET 1 OF 1	UNITS: mm	DISCIPLINE MECHANICAL

PRO/E VERSION: 19.0

REV A
DRAWING NUMBER 67212MEDH204
SIZE A0

NAME:IBURGIA OBJECT:67212MEDH204 DATE:27-Oct-00 15:59:44