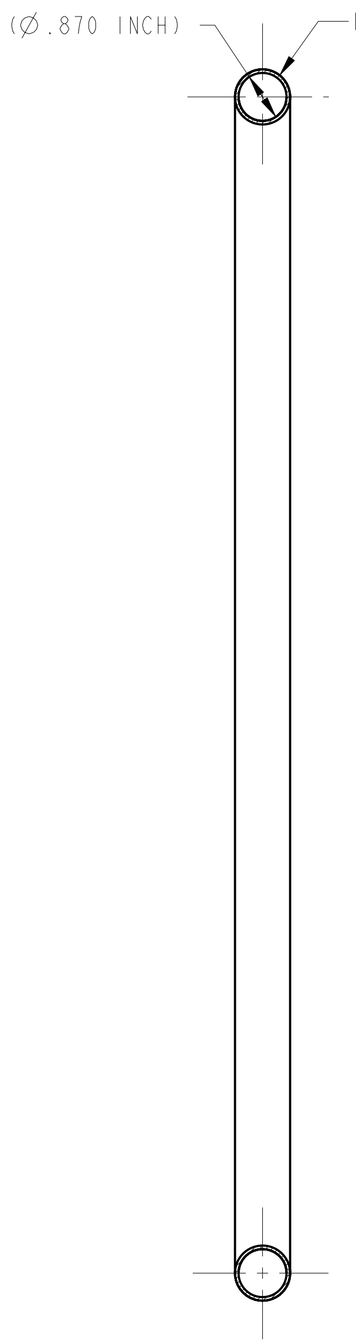

SECTION **A-A**

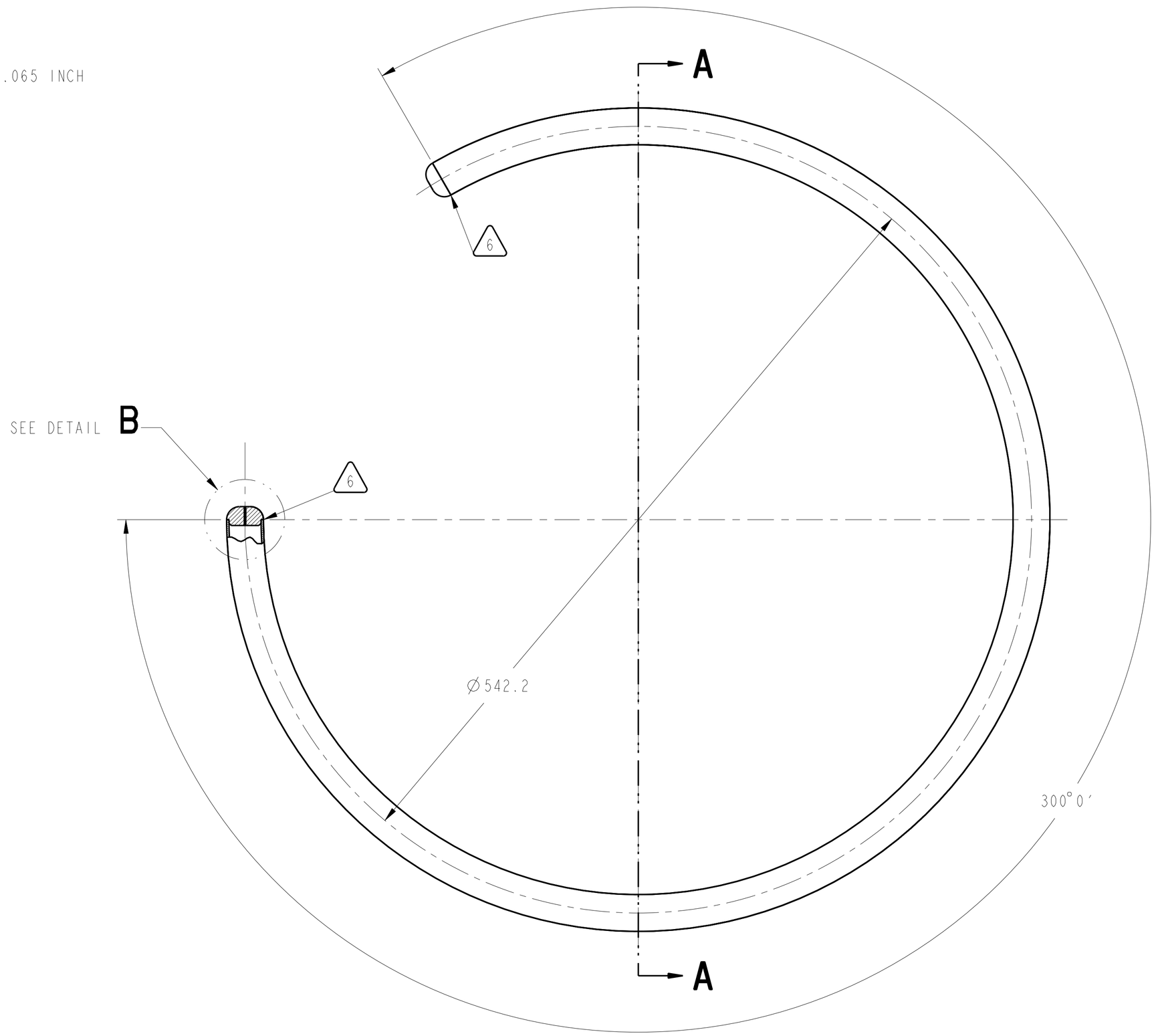

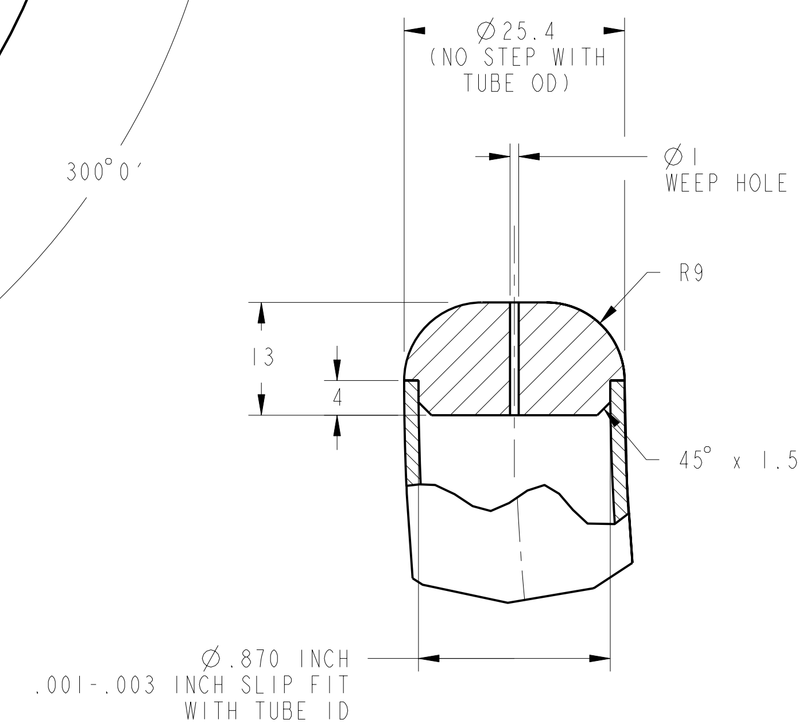

DETAIL **B**
2 PLACES
SCALE 2:1

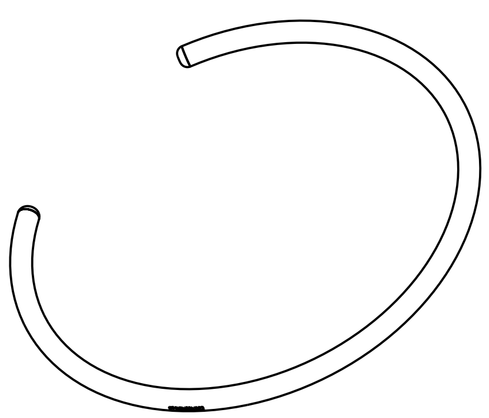

ISO VIEW
SCALE 1:5

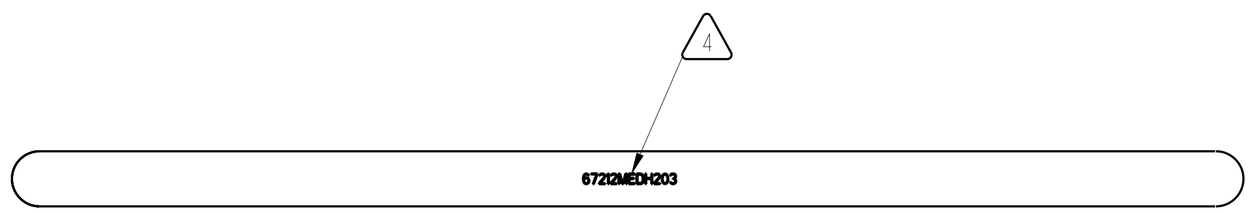

1. MATERIAL: 6061-T6 ALUMINUM TUBING PER ASTM B210.
2. CERTIFICATE OF CONFORMANCE REQUIRED FOR MATERIAL.
3. 1.6 Ra ALL OVER PER ANSI/ASME B46.1.
4. ELECTROCHEMICAL ETCH DRAWING PART NUMBER 67212MEDH203 ON SPECIFIED SURFACE PER SAE AS478, METHOD 7A (ZONE B5).
5. HARD ANODIZE PER MIL-A-8625, TYPE III, CLASS 2, BLUE, STANDARD THICKNESS.
6. APPLY LOCTITE 680 PER MANUFACTURER'S SPECIFICATIONS TO ATTACH CAP TO TUBE.
7. CLEAN SURFACES WITH 190 PROOF ETHYL ALCOHOL. WIPE WITH CLEAN COTTON SWABS AND/OR LINT-FREE CLOTH.
8. HANDLE WITH CLEAN, LINT-FREE GLOVES.
9. BEFORE STORAGE, PROTECT WITH CONTAMINATION BARRIER. USE CLEAN, NEW, TRANSPARENT, POLYETHYLENE BAG FOR SMALL ITEMS, OR 4 MIL THICK MINIMUM POLYETHYLENE SHEET SEALED WITH FIBERGLASS PACKAGING TAPE. SEAL AND MARK WITH IDENTIFICATION NUMBER ON TAG ATTACHED TO BAG.
10. PROCESS PLAN REQUIRED
11. ESTIMATED WEIGHT = 0.501 Kg.

CHG	ZONE	DESCRIPTION	APP/DATE
A	D7 & C3	ADDED WEEP HOLE TO END CAP	MJA 05/11/99

REVISIONS

UNLESS OTHERWISE SPECIFIED:
1. ALL DIMENSIONING AND TOLERANCING PER ASME Y14.5M-1994
2. ALL DIMENSIONS ARE IN MILLIMETERS
3. BREAK EDGES: 0.2-0.5
4. LINEAR TOLERANCES:
   0.5-6 ±0.1
   OVER 6-30 ±0.2
   OVER 30-120 ±0.3
   OVER 120-315 ±0.5
   OVER 315-1000 ±0.8
   OVER 1000-2000 ±1.2
5. ANGULAR TOLERANCES: 0° 30′

CONTRACT	NAS3-27600
CONTRACTOR	ADF, INC.
TASK ORDER	60
DRAFTER	ADF/ J. IMBURGIA
ENGINEER	ANLX/ M. POLITI
DESIGNER	ADF/ J. IMBURGIA

THIRD ANGLE PROJECTION

NATIONAL AERONAUTICS AND SPACE ADMINISTRATION
JOHN H. GLENN RESEARCH CENTER
LEWIS FIELD
CLEVELAND, OHIO

TEST CHAMBER MODULE ASSEMBLY
67212MELH200

203 LOCK RING HANDLE

PDM REL LEVEL: **BASELINE** PDM REVISION: **x.9**
PDM DATABASE: **FCF**
MODEL NAME: **67212MEDH203**
PRIOR TO USE VERIFY THE INTENDED PURPOSE IN PDM ("FOR" ATTRIBUTE)

SIZE	DRAWING NUMBER	REV	BLDG	AREA
A1	67212MEDH203	A	333	-
			UNITS: mm	
SCALE: 1:2	INITIAL REL DATE 05/05/99	SHEET 1 OF 1	DISCIPLINE MECHANICAL	

DRAWING NUMBER 67212MEDH203
SIZE A1
REV A

PRO/E VERSION: 19.0

NAME:EDJEN OBJECT:67212MEDH203 DATE:27-Oct-00 16:50:21