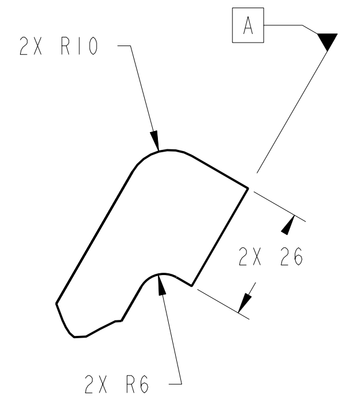

VIEW **B-B**

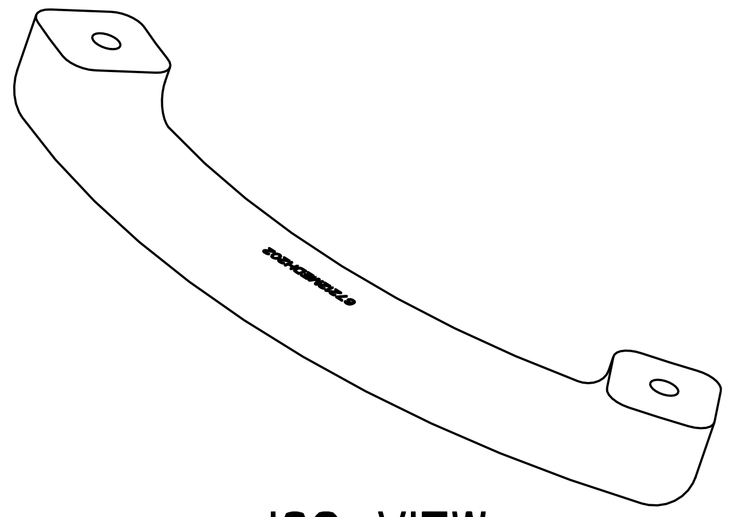

ISO VIEW

(TANGENT EDGE LINES SHOWN FOR CLARITY)
SCALE 1:1

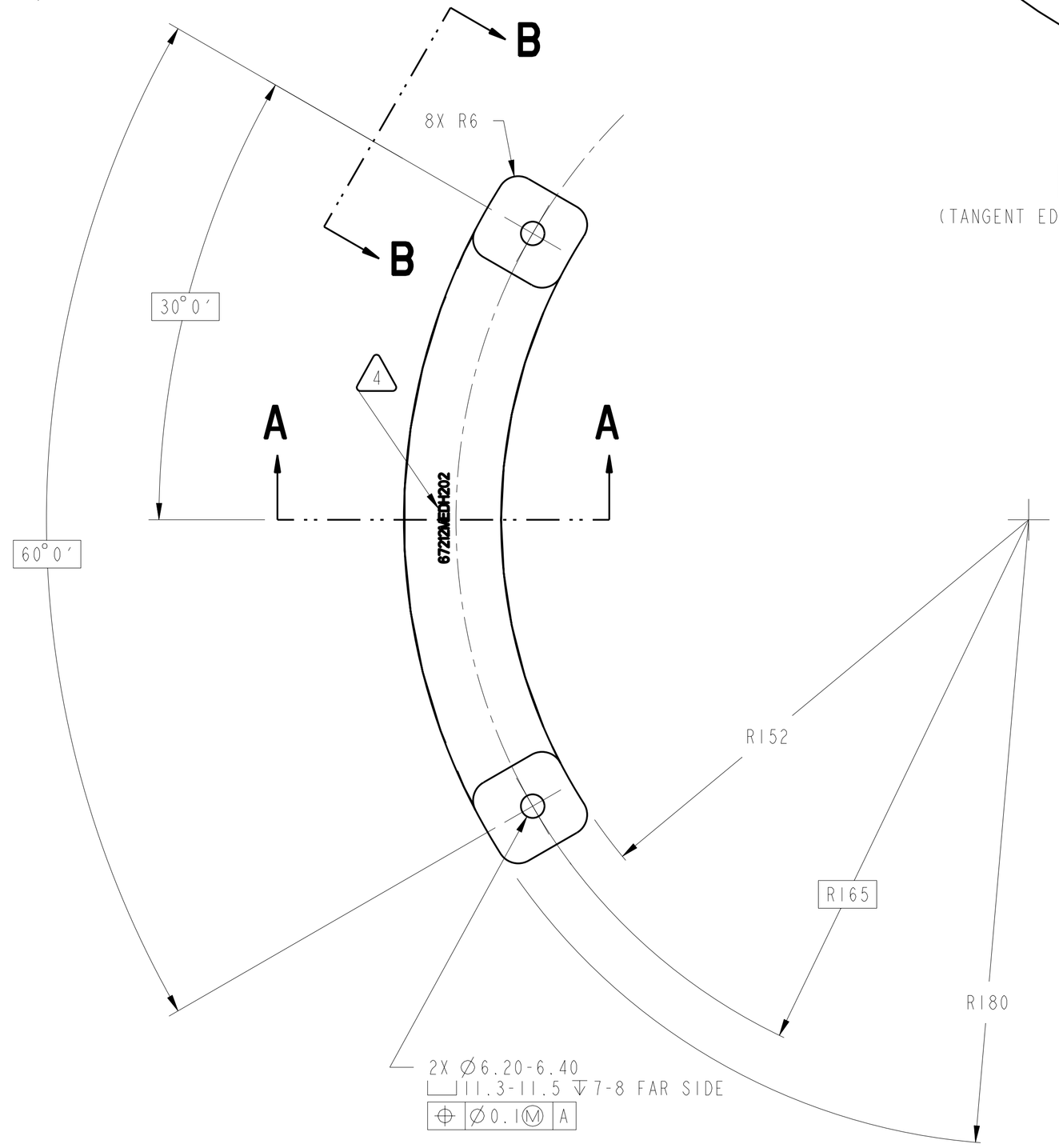

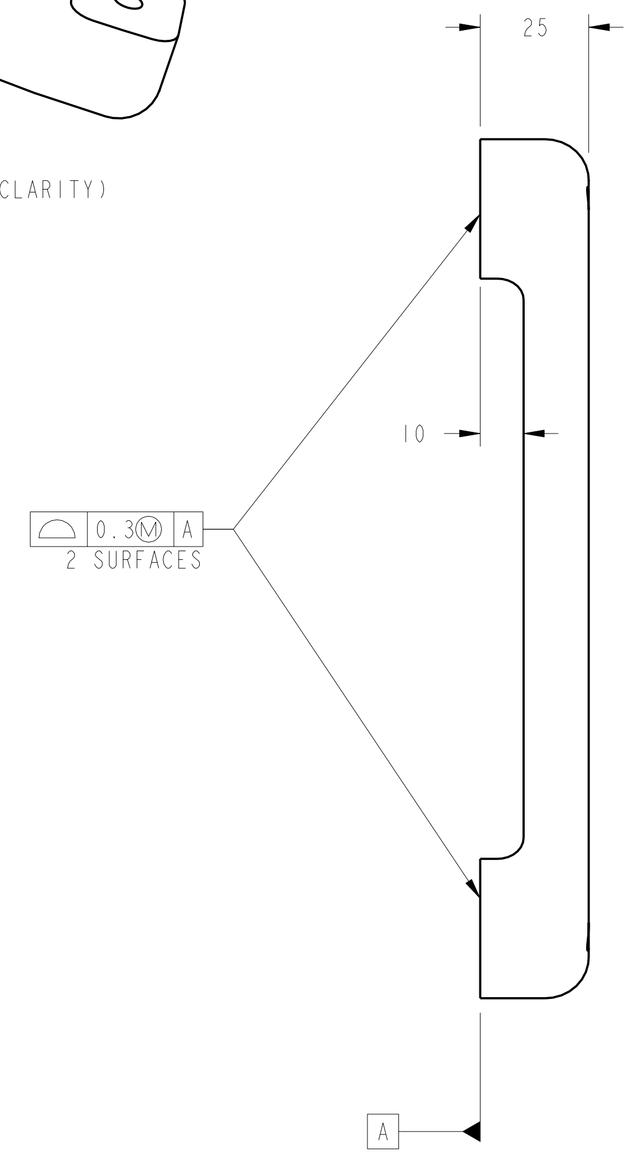

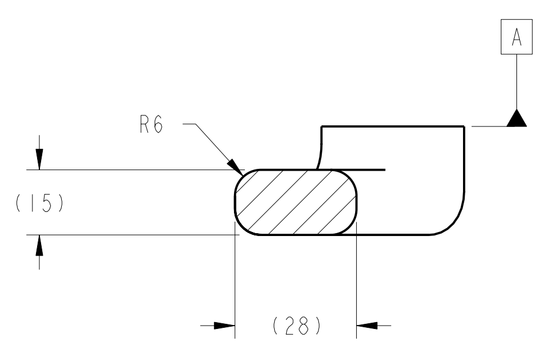

SECTION **A-A**

1. MATERIAL: 6061-T6 ALUMINUM PER FEDERAL SPEC QQ-A-250/11.1
2. CERTIFICATE OF CONFORMANCE REQUIRED FOR MATERIAL.
3. 1.6 Ra ALL MACHINED SURFACES PER ANSI/ASME B46.1.
4. ELECTROCHEMICAL ETCH DRAWING PART NUMBER XXXXXXXXXXXX ON SPECIFIED SURFACE PER SAE AS478, METHOD 7A (ZONE D6).
5. HARD ANODIZE PER MIL-A-8625, TYPE III, CLASS 2, COLOR: BLUE, .001 TO .002 INCHES THICK.1
6. CLEAN SURFACES WITH 190 PROOF ETHYL ALCOHOL. WIPE WITH CLEAN COTTON SWABS AND/OR LINT-FREE CLOTH.
7. HANDLE WITH CLEAN LINT-FREE GLOVES.
8. BEFORE STORAGE, PROTECT WITH CONTAMINATION BARRIER. USE CLEAN, NEW, TRANSPARENT, POLYETHYLENE BAG FOR SMALL ITEMS, OR 4 MIL THICK MINIMUM POLYETHYLENE SHEET SEALED WITH FIBERGLASS PACKAGING TAPE. SEAL AND MARK WITH IDENTIFICATION NUMBER ON TAG ATTACHED TO BAG.
9. PROCESS PLAN REQUIRED.
10. ESTIMATED WEIGHT=0.241 Kg.

CHG	ZONE	DESCRIPTION	APP/DATE

REVISIONS

UNLESS OTHERWISE SPECIFIED:
1. ALL DIMENSIONING AND TOLERANCING PER ASME Y14.5M-1994
2. ALL DIMENSIONS ARE IN MILLIMETERS
3. BREAK EDGES: 0.2-0.5
4. LINEAR TOLERANCES:
   0.5-6 ±0.1
   OVER 6-30 ±0.2
   OVER 30-120 ±0.3
   OVER 120-315 ±0.5
   OVER 315-1000 ±0.8
   OVER 1000-2000 ±1.2
5. ANGULAR TOLERANCES: 0° 30′

CONTRACT	NAS3-27600
CONTRACTOR	ADF, INC.
TASK ORDER	60
DRAFTER	ADF/ M. AYNIK
ENGINEER	ANLX/ M. POLITI
DESIGNER	ADF/ J. IMBURGIA

THIRD ANGLE PROJECTION

NATIONAL AERONAUTICS AND SPACE ADMINISTRATION
JOHN H. GLENN RESEARCH CENTER
LEWIS FIELD
CLEVELAND, OHIO

TEST CHAMBER MODULE ASSEMBLY

67212MEDH200

202 DOOR HANDLE

PDM REL LEVEL: **BASELINE** PDM REVISION: **x.12**
PDM DATABASE: **FCF**
MODEL NAME: **67212MEDH202**
PRIOR TO USE VERIFY THE INTENDED PURPOSE IN PDM ("FOR" ATTRIBUTE)

SIZE	DRAWING NUMBER	REV	BLDG	AREA
A1	67212MEDH202	X	333	-
			UNITS: mm	
SCALE: 1:1	INITIAL REL DATE 05/19/99	SHEET 1 OF 1	DISCIPLINE MECHANICAL	

PRO/E VERSION: 18.0

DRAWING NUMBER 67212MEDH202 SIZE A1 REV X

NAME:EDJEN OBJECT:67212MEDH202 DATE:27-Oct-00 16:50:00