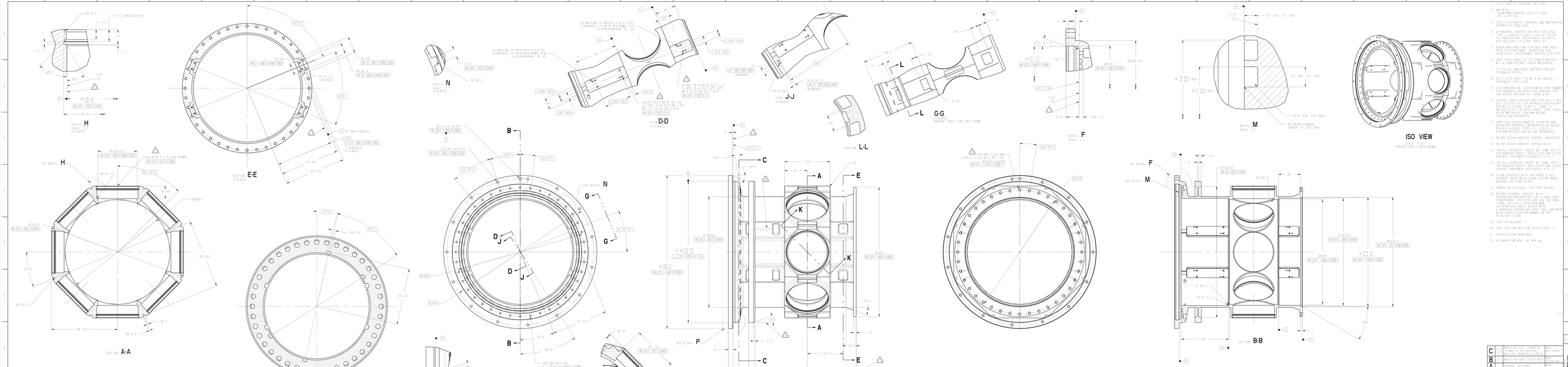

C	C.R. 0011172 - 1) BAU 0-2 2) BAU 0-3 3) BAU 4, 7&10 FEATURES 5) MOUNTING FORM REVISION B	R.W. 2011-8-99	
B	01 MODIFIED HEAT TREAT NOTE	R.W. 2011-12-29	
A	GENERAL REVISIONS	R.W. 2011-12-29	
CHG. CODE	DESCRIPTION	APPLICABILITY	

UNLESS OTHERWISE SPECIFIED:
1. ALL DIMENSIONS ARE IN MILLIMETERS AND TOLERANCE FOR DIMENSIONS WITHOUT TOLERANCE IS:
2 PLACE DECIMALS ± 0.25
3 PLACE DECIMALS ± 0.13
4 PLACE DECIMALS ± 0.5
ANGULAR TOLERANCE ± 0.5°
2. DEBURR ALL EDGES .01 - .03 X 45°
3. ALL FILLET RADII TO BE 3 mm UNLESS OTHERWISE SPECIFIED
4. ALL SURFACE FINISHES TO BE 6.4 um UNLESS OTHERWISE SPECIFIED
5. ELECTROWINDING ETCH DRAWING PART NUMBER ELECTROWINDING SPECIFICS SURFACE PER SAE AS478, METHOD 1A, LEVEL E1A
6. SURFACE TREAT ENTIRE PART PER MIL-C-5541 SEE PRINTS 1 & 2 OR APPROVED EQUIVALENT PER MIL-C-8184, CLASS 2, TYPE 1 (ALL SURFACE TREATMENT MUST TOUCH UP BY METHOD A, PORCELAIN BRUSHING INSTALLING REINSERTS)
11. HARD FLAT BLACK ANODIZE (INTERIOR AND EXTERIOR SURFACE BOUNDARIES AS NOTED) PER MIL-A-8625, TYPE III, CLASS 2, PERFORM BEFORE INSTALLING REINSERTS
12. DO NOT BLACK ANODIZE SURFACE INDICATED
13. DO NOT BLACK ANODIZE TAPPED HOLES
14. INSTALL REINSERT INSERT NO. XRML 410-25 PER MANUFACTURER'S SPECIFICATIONS AFTER SURFACE TREATMENT PER NOTES 10 & 11
15. INSTALL REINSERT INSERT NO. XRML 410-25 PER MANUFACTURER'S SPECIFICATIONS AFTER SURFACE TREATMENT PER NOTES 10 & 11
16. CLEAN SURFACES WITH 190 PROOF ETHYL ALCOHOL AND LINT FREE CLEAN COTTON SWABS AND/OR LINT FREE CLOTHS
17. HANDLE WITH CLEAN, LINT-FREE GLOVES
18. BEFORE STORAGE, PROTECT WITH CONTAMINATION BARRIER: USE CLEAN, NEW TRANSPARENT POLYETHYLENE BAG FOR SMALL PARTS, OR WRAP LARGE PARTS WITH POLYETHYLENE SHEET COATED WITH FIBERGLASS PACKAGING TAPE. SEAL AND MARK WITH PART NUMBER AND REVISION ON TAG ATTACHED TO BAG
19. LAST DATUM USED: J
20. LAST SECTION OR VIEW LETTER USED: P
21. PROCESS PLAN REQUIRED
22. ESTIMATED WEIGHT: 32.906 kg

CONTRACT	NAS2-23500		
DRAWING SIZE	D		
SCALE	1:1		
DATE	2011-12-29		
DRAWN BY	R.W.		
CHECKED BY			
APPROVED BY			
TOLERANCE			
THIRD ANGLE PROJECTION			

NATIONAL AERONAUTICS AND SPACE ADMINISTRATION
GODDARD SPACE FLIGHT CENTER
GREENBELT, MD

TEST CHAMBER MODULE ASSEMBLY

67120MEC0201

201 CHAMBER WINDOW SECTION

FOR REL LEVEL: RELEASE	FOR REVISION: 20	R3	67120MEC0201
CM FORMAT: MCF			
MCS: CORE: 67120MEC0201			

DRAWN	R.W.	2011-12-29	
CHECKED			
APPROVED			
MATERIAL			
FINISH			
DO NOT SCALE DRAWING			

R3 67120MEC0201