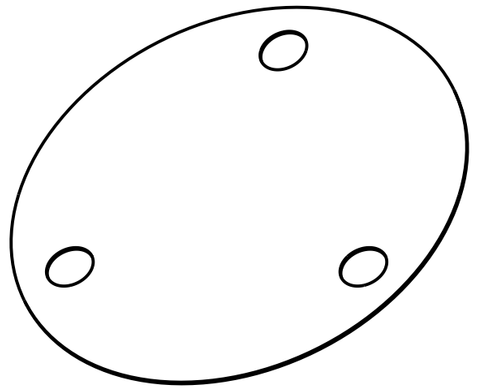

7. BEFORE STORAGE, PROTECT WITH CONTAMINATION BARRIER. USE CLEAN, NEW, TRANSPARENT, POLYETHYLENE BAG FOR SMALL ITEMS, OR 4 MIL THICK MINIMUM POLYETHYLENE SHEET SEALED WITH FIBERGLASS PACKAGING TAPE. SEAL AND MARK WITH IDENTIFICATION NUMBER ON TAG ATTACHED TO BAG.

9. PROCESS PLAN REQUIRED.

10. ESTIMATED WEIGHT = 0.002 Kgs. (APPROXIMATE)

1. MATERIAL: 105 X 105 SQUARE MESH WOVEN WIRE CLOTH. 300 SERIES STAINLESS STEEL ∅.003 INCH WIRE.

2. CERTIFICATE OF CONFORMANCE REQUIRED FOR MATERIAL.

3. SURFACE TREATMENT: CLASS 3 CHEMICAL CONVERSION COATING PER MIL-C-5541: YELLOW/GOLD; USE IRIDITE 14-2 (ref. MACDERMID INC.); APPLY BY BRUSH OR IMMERSION AS APPLICABLE. BRUSH AND/OR SWAB TOUCH UP PER MIL-C-5541 SEC. 3.4; USE IRIDITE 14-2 BRUSH-ON KIT. THE USE OF IRIDITE 14-2 EQUIVALENT(S) IS PROHIBITED UNLESS SPECIFICALLY APPROVED BY ENGINEERING.

4. IDENTIFY BY TAGGING WITH DRAWING PART NUMBER 67212MEDH188, PER SAE AS478, METHOD 35.

5. CLEAN SURFACES WITH 190 PROOF ETHYL ALCOHOL. WIPE WITH CLEAN COTTON SWABS AND/OR LINT-FREE CLOTH.

6. HANDLE WITH CLEAN, LINT-FREE GLOVES.

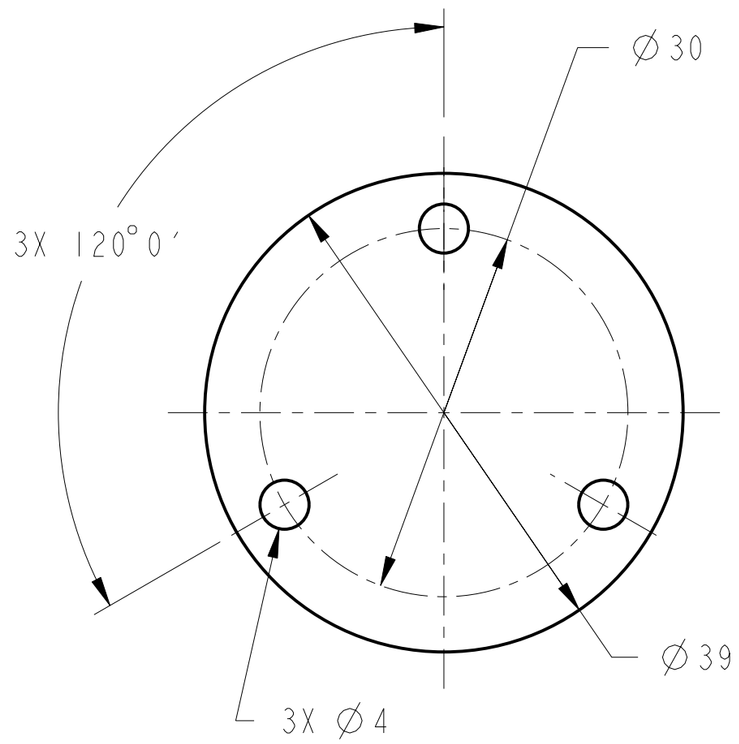

CREATION DATE	15-Sep-00
MODEL NAME	67212MEDH188
DRAWING NAME	67212MEDH188

NAME:EDJEN OBJECT:67212MEDH188 DATE:27-Oct-00 16:45:55

THIRD ANGLE PROJECTION

CAD DRAWING
DO NOT REVISE MANUALLY

UNLESS OTHERWISE SPECIFIED:
1. ALL DIMENSIONS ARE IN MM

2. BREAK EDGES 0.2 - 0.5

3. LINEAR TOLERANCES
0 TO 6 ± 0.1
OVER 6 TO 30 ± 0.2
OVER 30 TO 120 ± 0.3
OVER 120 TO 315 ± 0.5
OVER 315 TO 1000 ± 0.8
OVER 1000 TO 2000 ± 1.2

4. ANGULAR TOLERANCES 0°30′

DIMENSIONS AND TOLERANCING PER ASME Y14.5M-1994

AUTHORIZED by CM when under FORMAL Configuration Control

DESIGN CONTRACTOR

DRAFTER	M. AYNIK	
DESIGNER	M. AYNIK	
REVIEWER		
ENGINEER		

CHG	ZONE	DESCRIPTION	APP/DATE

REVISIONS

NATIONAL AERONAUTICS AND SPACE ADMINISTRATION
JOHN GLENN RESEARCH CENTER
LEWIS FIELD, CLEVELAND, OHIO

CONTRACT NUMBER: NAS3-99155

FEDERAL DATA CORPORATION

STRUCTURE		
MAT'L PROC		
CONFIG MGT		

PRO/ENGINEER: 2000i
PDM MDL RELEASE LEVEL: RELEASE
PDM MDL REVISION: x.3
MODEL: 67212MEDH188

EMI FILTER SCREEN

NEXT ASSY: 67212MEDH152

SIZE	CAGE CODE	DRAWING NUMBER	REV.
A2		67212MEDH188	-

SCALE	RELEASE DATE	SHEET	UNITS
2:1	XX/XX/XXXX	1 OF 1	MM